CLEAN HEALTHY & FRESH

Sanitation Options

A guide to building or improving your toilet facility

Volume 1

ADB ASIAN DEVELOPMENT BANK
Solomon Water Safe water for a healthy nation
PLAN INTERNATIONAL
live & learn ENVIRONMENTAL EDUCATION

TABLE OF CONTENTS

GLOSSARY 6
Acronyms 7
INTRODUCTION 8
About this manual 8
SECTION 1. TOILET TYPES & USER INTERFACES 10
1.1 Toilet types 1
1.2 Accessibility aides for toilets: 13
1.3 Menstrual health additions to toilet rooms: 15
SECTION 2. OPTIONS FOR ONSITE STORAGE AND TREATMENT 16
2.1 Sanitation storage and treatment options 16
2.1.1'Dry' sanitation storage and treatment 17
2.1.1.1 VIP toilet 17
2.1.1.2 Dry Pit Sizing 20
2.1.2 'Wet' sanitation storage and treatment 21
2.1.2.1 Cesspits 21
2.1.2.2 Cesspit Lining Options 25
2.1.2.3 Cesspit lining design considerations 28
2.1.2.4 Recommended Cesspit Dimensions 29
2.1.2.5 Septic tanks 30
2.1.2.6 Soakaway pits and trenches 33
2.1.2.7 Soakaway pit sizing 34
2.1.2.8 Cesspits & soakaway pit linings 36
2.1.2.9 Soakaway pit options 36
2.2 Grease traps for kitchen waste entering greywater systems 38
2.3 Choosing your ideal sanitation storage and treatment options 39
2.3.1 Solomon Islands sanitation ladder for peri-urban and urban communities 39
2.3.2 Solomon Islands sanitation decision tree for peri-urban households 41
SECTION 3. TOILET SUPERSTRUCTURE 42
3.1 Thao model 42
3.2 Timber clad model 43
3.3 Corrugated iron sheet wall model 44
3.4 Toilet & shower room model 45
SECTION 4. HYGIENE FACILITIES 47
4.1 Handwashing Facility Setup Options 47
4.2 Menstrual Health Options for toilet rooms 49
SECTION 5. TOILET IMPROVEMENTS AND CUSTOMIZATION 50
5.1. Separating greywater and blackwater 50
5.2. Upgrade scenario 1: Addition of a separate soakaway pit for greywater 51
5.3. Upgrade Scenario 2: Direct pit improved to offset pit pour flush toilet 52

5.4. Upgrade Scenario 3: Single offset pit improved to dual offset pit 53
5.5. Scenario 4: Addition of soakaway pit to cesspit 54
5.6. Scenario 5: Addition of a soakaway pit to septic tank without a soakaway pit .. 55
5.7. Scenario 6: Addition of second soakaway pit to a septic tank 56
5.8. Scenario 7: Move the toilet room under/within the first floor of the house 57
5.9. Scenario 8: Customized superstructure to accommodate universal accessibility 58
REFERENCES 59

FIGURES

Figure 1. Inclusive and accessible toilet superstructure plan options 14
Figure 2. Angled pit walls reduce the risk of collapse during construction 16
Figure 3. Ventilated Improved Pit latrine (VIP) 17
Figure 4. Typical dry faecal storage pit (see table below for dimensions) 20
Figure 5. Typical Cesspit arrangements – 'direct' and 'offset' 21
Figure 6. Pour flush direct cesspit toilet 22
Figure 7. Single offset pit pour flush layout 22
Figure 8. Offset cesspit in 'alternating' arrangement (plan view) 23
Figure 9. Offset cesspit in 'series' arrangement (plan view) 23
Figure 10. Offset pour flush cesspit toilet 24
Figure 11. Cesspit with 44-gallon drum lining 26
Figure 12. Cesspit with vehicle tyre lining 26
Figure 13. Cesspit with cement ring pit lining 27
Figure 14. Double chamber septic tank 31
Figure 15. Double chamber septic tank design details 32
Figure 16. Roto-mould septic tank available in 3,000 litre and 1,000 litre sizes 32
Figure 17. Soakaway trench with backfilled stone details 34
Figure 18. Soakaway pit filled with stones to prevent collapse 36
Figure 19. Soakaway pit filled with used car tyres and stones 36
Figure 20. Soakaway pit with honey comb brick lining 29
Figure 21. Example grease trap details taken from Solomon Islands NBC (2022) 30
Figure 22. Solomon Islands NBC (2022) grease trap dimensions 30
Figure 23. RELN off the shelf household grease trap dimensions with 100mm PVC inlet and outlet, 18 litre capacity. 30
Figure 24. Superstructure dimensions and details Thao model 34

Figure 25. Superstructure dimensions and details - timber cladding....35
Figure 26. Superstructure - corrugated iron / colorbond cladding and roof....36
Figure 27. Toilet and shower room - concrete block dimensions....37
Figure 28. Household handwashing facility options....39
Figure 29. Typical Menstrual health management materials setup in a toilet room....41
Figure 30. Toilet with separate soakaway pit for blackwater and greywater....43
Figure 31. Typical direct single pit toilet setup....44
Figure 32. Recommended upgrade to offset pit with separate greywater soakaway pit44
Figure 33. Typical setup of an existing single offset cesspit....45
Figure 34. Recommended upgrade to add a second alternating offset cesspit to reduce desludging costs....45
Figure 35. Single offset cesspit arrangement....46
Figure 36. Single offset cesspit with soakaway pit added in series to improve percolation rates....46
Figure 37. Septic tank without soakaway....47
Figure 38. Recommended upgrade to add soakaway pit to septic tank outfall....47
Figure 39. Toilet with septic tank and single soak pit....48
Figure 40. Upgraded waste system with additional soak pit....48
Figure 41. Toilet room added under elevated house....49
Figure 42. Toilet room can be added inside a house....49
Figure 43. Customisation of toilets to accommodate people with mobility challenges 50

TABLES

Table 1. Toilet types, user interface and appropriate waste options....10
Table 2. Inclusive toilet superstructure design details 14
Table 3. Advantages & Disadvantages of VIP toilets....18
Table 4. Operation & Maintenance of VIP toilets....19
Table 5. Dry circular pit sizing calculations....20
Table 6. Advantages and disadvantages of cesspit toilets 24
Table 7. Cesspit lining design considerations 28
Table 8. Dimensions for circular "wet pit" 29
Table 9. Recommended Backfill Width ("A") (see 'Figure 5. Typical Cesspit arrangements – 'direct' and 'offset'' for the width 'A' in the table) 29
Table 10. Septic tank sizing calculation 30
Table 11. Septic tank dimensions (blackwater only) 31
Table 12. Septic tank dimensions (blackwater + greywater)....31
Table 13. Soakaway trench sizing for blackwater + greywater systems AS/NZS 1547-2012) 33
Table 14. Soakaway trench sizing for blackwater only systems (AS/NZS 1547-2012)..33
Table 15. Circular soakaway pit sizing (septic tank outfall - blackwater only) 34
Table 16. Circular soakaway pit sizing for greywater only....35
Table 17. Recommended pit linings for different soil types 36
Table 18. Solomon Islands Sanitation Ladder for peri-urban and urban households 40
Table 19. Superstructure – Thao - advantages and disadvantages....43
Table 20. Superstructure - timber cladding - advantages and disadvantages 43
Table 21. Superstructure – iron sheet - advantages and disadvantages....44
Table 22. Toilet and shower room - advantages and disadvantages 46
Table 23. Handwashing facility advantages and disadvantages 47
Table 24. Handwashing options available locally 48
Table 25. Handwashing wastewater soakaway sizing....49

GLOSSARY

Basic Sanitation: use of improved facilities which are not shared with other households (JMP definition)

Blackwater: wastewater and sewage from toilets and septic tanks (i.e. includes faeces).

Cesspit: a pit for the disposal of liquid waste and sewage designed to percolate liquid waste into surrounding soils at the same time as digesting faecal sludge.

Desludging: the process of emptying sludge from a septic tank or cesspit.

Excreta: excreta consists of urine and faeces that is not mixed with any flush water. Excreta is small in volume but concentrated in both nutrients and pathogens. Depending on the quality of the faeces, it has a soft or runny consistency. (https://sswm.info/content/excreta)

Greywater: wastewater from showers, kitchens, laundry, basins that has not been in contact with or include faeces.

Improved sanitation facilities: are those designed to hygienically separate excreta from human contact. (JMP definition)

Lining: Support of the sides of an excavation made out of concrete, bricks, tyres, stone or precast concrete rings. During construction, the lining provides protection against caving and collapse and prevents crumbling ground from filling up the dug hole. After completion of the well it retains the walls. (https://sswm.info/content/lining)

Onsite sanitation: refers to the safe storage and treatment of faecal waste on site. Usually via dry pits, cesspits, septic tanks and absorption pits/trenches that directly receive, store and treat black and/or greywater.

Percolation test: a process to determine the water absorption rate of soil.

Safely managed sanitation: Use of improved facilities that are not shared with other households and where excreta are safely disposed of in situ or removed and treated offsite (JMP definition)

Sanitation services: Sanitation services refer to the management of excreta from the facilities used by individuals, through emptying and transport of excreta for treatment and eventual discharge or reuse. (JMP definition)

Soakaway pit: A soakaway pit, also known as a soakaway, leach pit or absorption pit, is a covered, porous-walled chamber that allows water to slowly soak into the ground.

Soakaway trench: also known as an absorption trench, is a shallow trench designed to receive greywater and/or blackwater to be treated by percolating into the surrounding soil.

Substructure: is the section of the sanitation system that manages wastewater storage and treatment and is usually built underground. This includes composting chambers, cesspits, soakaway pits/trenches and septic tanks.

Superstructure: Superstructure is simply referring to the house or walls/roof/door encasing the toilet to provide privacy, accessibility and weather protection for users

Toilet: a fixed receptacle into which a person may urinate or defecate, typically consisting of a large bowl connected to a system for flushing away the waste into a sewer or septic tank

ACRONYMS

AS/NZS:	Australia Standards / New Zealand Standards
JMP:	Joint Monitoring Program
NBC:	(Solomon Islands) National Building Code
PVC:	Polyvinyl Chloride
SDG:	Sustainable Development Goals
SI:	Solomon Islands
the Manual:	this document, the Sanitation Options Manual
VIP:	Ventilated Improved Pit
WASH:	Water, Sanitation and Hygiene
WHO:	World Health Organization

INTRODUCTION

All Solomon Islanders have the right to access, own and use safely managed sanitation[1] and basic level hygiene[2] systems in their household including a toilet and handwashing facilities.

The Solomon Water 30 Year Strategic Plan includes "a target of achieving 30% coverage of properties within Honiara with access to the reticulated wastewater network, including the majority of non-residential properties"[3] by 2047. This means that the majority of households will continue to depend on on-site sanitation technologies for the foreseeable future.

According to the Solomon Water Strategic Plan, "poor hygiene, lack of on-site treatment and poor access to sewerage are the main issues affecting the sanitation sector in the Solomon Islands. The widespread use of septic systems in urban areas is a significant issue, due to poor construction, lack of maintenance and lack of resources to enforce construction and operating standards. This may result in contamination of rivers, coastal waters and groundwater near urban centers, with severe health and environmental implications."

In late 2021, Solomon Water and partners Plan International and Live & learn Environmental Education conducted multiple studies of household sanitation in six settlements[4] in and around Honiara to inform the development of this Manual. The household WASH Survey found that 87% of households in the target settlements have their own toilet, but only 51% appeared usable. Of the total households surveyed, 44% had water-based toilets with waste storage tanks of varied construction.

The context and these survey findings and other investigations of household sanitation in settlements around Honiara have informed the content of this Sanitation Options Manual and the technologies and recommended components and sanitation package options within it.

About this manual

This Sanitation Options Manual (the Manual) provides instruction and guidelines to sanitation service providers (e.g. plumbers, carpenters, construction workers) and households. It serves as a guide to construct comfortable and hygienic toilets that protect individuals, households and our environment.

The Manual provides a basic and easy step-by-step guide for households and sanitation service providers to select and construct 'safely managed' sanitation facilities. The toilet models included in the manual were developed and refined through a community consultation workshop in Honiara with input from private plumbers and a diverse range of community members.

The options are deliberately designed to be easily upgraded to a higher level of service and/or to be more accessible for the specific needs of users, particularly those with mobility challenges.

The Manual does not include every available sanitation technology or option.

1 The UNICEF/WHO Joint Monitoring Program (JMP) defines 'safely managed sanitation' as the "Use of improved facilities that are not shared with other households and where excreta are safely disposed of in situ or removed and treated offsite." https://washdata.org/monitoring/sanitation

2 The UNICEF/WHO JMP defines 'basic service' for hygiene as the "availability of a handwashing facility with soap and water at home." https://washdata.org/monitoring/hygiene

3 Solomon Water 30 Year Strategic Plan, https://www.solomonwater.com.sb/index.php/projects/30-year-strategic-plans

4 The six settlements include; Kombito 1, Kombito 2, Kombito 3, Mamulele, Green Valley and Independence Valley

This manual has been developed by Plan International in collaboration with Solomon Water, Live & Learn Environmental Education, Honiara City Council and Solomon Inlands Government and with financial support from Asia Development Bank. Final endorsement from Solomon Islands Government is being sought.

How to use the Sanitation Options Manual

The Manual is a guide to help sanitation service providers and households identify and construct appropriate toilets including the sub-structure and superstructure for individual sites and households within Honiara settlements. The Manual includes separate sections on each of these 'components' including;

- the toilet: user interface including seat, water seals, cisterns and handwash facilities,
- the sub-structure: sanitation storage and treatment components such as cesspits, septic tanks and soakaways; and
- the superstructure: the structure/house around the toilet that provides privacy and accessibility assistance and protection from weather.

These sections include a table of pros and cons for the different technology options and a list of materials and indicative costs (at time of printing) required for construction.

A 'decision tree' provides guidance on selecting appropriate 'toilet' and 'sub-structure' technology for specific site locations and conditions.

The Manual also includes a section of proposed 'latrine packages' with suggested combinations of 'toilet', 'sub-structure' and 'superstructure'.

A series of step-by-step guides in how to construct the recommended packages is provided as a separate volume to the manual.

What the manual is NOT

The Manual is not a construction code and should be read in conjunction with the Solomon Islands National Building Code 2022.

The Manual is not a comprehensive guide to all sanitation options available to households.

SECTION 1. TOILET TYPES & USER INTERFACES

This section shows the different toilet types and user interfaces available depending on the user's preference and chosen sub-structure. All the toilet types detailed below are locally available in the Solomon Islands. Choosing the toilet type which is ideal for you and your site is very important and will depend on variables such as personal preferences, environmental conditions, finances and water access.

1.1 Toilet types

Toilets refer to the commodes which hygienically separate human excreta from human contact to prevent exposure to faecal contamination. The toilet types listed in table 1.1 are locally available and are matched with suitable waste disposal and storage options.

Table 1. Toilet types, user interface and appropriate waste options

	Toilet type	User interfaces	Description	Image	Sanitation storage options
a	VIP (ventilated improved pit latrine)	Concrete pedestal without water seal	Locally made concrete pedestal designed for user comfort and use with a 'dry' toilet system such as VIP or composting toilet.		Dry pit
b	VIP (ventilated improved pit latrine)	Rotomold field toilet	Fabricated in Fiji, with potential to be fabricated in Solomon Islands, this latrine is designed as a 'dry' toilet, with a vent pipe attachment and raised pedestal for comfort. It is light-weight and strong for portability and easily moved when a pit is full.	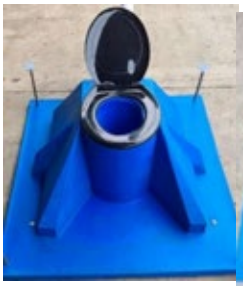	Dry pit
c	Pour flush	Concrete squatting water seal	Locally made water seals for use with 'pour flush' system with a direct cesspit storage/treatment system.		Direct cesspit

d	Pour flush	Raised Sato-pan	An imported plastic squatting toilet pan seal, inserted into a locally made concrete riser, designed for low-water usage and a direct cesspit storage/treatment system.		Direct cesspit
e	Pour flush	Concrete pedestal with water seal	Imported plastic bowl and seal, inserted into locally made concrete pedestal designed for user comfort and use with a 'wet', pour-flush system. Depending on trap type can be connected to offset cesspits, septic tank or direct cesspit.		Direct cesspit Offset cesspit Septic tank soakaway
f	Cistern Flush	Ceramic bowl with P-trap	Imported ceramic bowl designed for 'sitting' and for use with 'pour flush' or cistern system with an offset cesspit or septic tank storage/ treatment system. P-trap designed for waste pipe exiting the wall of the toilet structure.		Offset cesspit Septic tank & soakaway
g	Cistern Flush	Ceramic bowl with S-trap	As per above. S-trap designed for waste pipe to enter through the floor slab.		Direct cesspit Offset cesspit Septic tank & soakaway

1.2 Accessibility aides for toilets:

Many people in the community, such as people with a disability, pregnant women, children and the elderly, may have difficulty accessing and using a conventional toilet. When designing and constructing a toilet and superstructure, we need to consider the needs of all users in the household. Simple adjustments to toilet and superstructure design can ensure accessibility and usability for all. Some ideas and basic guidance on accessibility aids is provided below.

Technical specifications for two generic toilet superstructures are provided below in Figure 1. The aim is to provide as much 'independent access' as possible - this means facilities that a person can use without help, or with minimum help.[5]

- In-situ toilet options for people who are immobile or have incontinence issues
    - Adult nappies and/or pads
    - Mobile toilet seats/units with waste buckets can be moved to the person

- Access to the toilet room can be improved by;
    - Ensuring the toilet is close to the house
    - Having flat, clearly marked paths to the toilet for people with mobility and vision impairments
    - Having handrails along the path to the toilet for mobility and vision impaired
    - Including a string line as a guide (low-cost alternative to handrail) for vision impairments
    - Include ramps (low slope) to the toilet for people with mobility and vision impairments
    - Have wide doorway/door on toilet room for people with mobility impairments or wheelchairs
    - Include outward opening doors and large door handles
    - Have light in the toilet room for better visibility
    - Have light outside the toilet to aid visibility
    - Have a lock on the inside of the toilet door for security and privacy

- Accessible use of the toilet within the toilet room / superstructure
    - Raised seat (rather than squatting pan) for people who cannot squat easily
    - Handrails within the toilet room to assist with squatting, sitting and standing
    - Sufficient space for wheelchair users or people with walking aides to move within the toilet room
    - Non-slip floor surface

An example of a customized toilet superstructure for universal access is provided below.

5 WEDC/WaterAID, 2014, Compendium of accessible WASH technologies

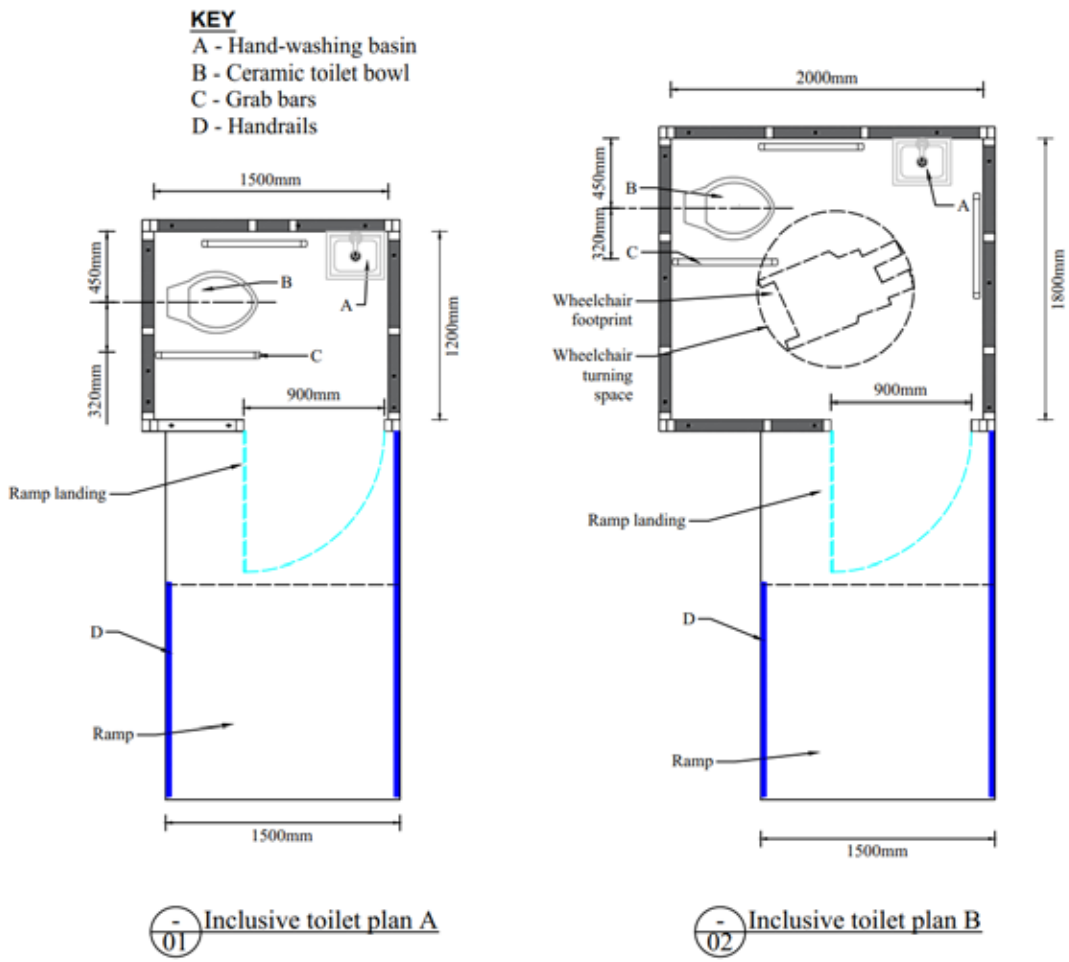

Figure 1. Inclusive and accessible toilet superstructure plan options

The table below outlines the recommended dimensions for inclusive toilets for people with disabilities or temporary mobility challenges.

Inclusive Toilet Plan A is recommended where users have sufficient mobility to access the toilet room independently and without a wheelchair.

Inclusive Toilet Plan B is recommended where users require a wheelchair and/or personal care givers to access the toilet room.

Table 2. Inclusive toilet superstructure design details

No.	Descriptions	Dimensions (mm)
1	Internal toilet room size (length x width)	Option A: 1500 x 1200 Option B: 2000 x 1800 (for wheelchair user)
2	Slope of ramp	1:15 to 1:20
3	Width of ramp	1500mm or more
4	Width of door (Door to open outside)	900mm or more
5	Handrail (either in Bamboo or GI pipe or stainless-steel bar)	Diameter – 50mm Height – 750mm - 900mm above finished floor level
6	Grab bar (either in GI pipe or stain-less-steel bar) inside the toilet room on both sides of toilet seat	Diameter – 50mm Height – 400mm – 900mm above finished floor level as appropriate
7	Colour for visibility	Walls and handrails painted in contrasting co-lours to improve visibility

Other adjustments to the toilet room may be required to accommodate various neurological and physical conditions. Talk with the household members to discuss their specific needs.

1.3 Menstrual health additions to toilet rooms:

People who menstruate can benefit from specific additional considerations in the construction and maintenance of a toilet room. Physical considerations to support menstrual health and hygiene management for women and girls include the following points;

- Size of the toilet room allows movement for changing of clothes
- A door lock on the inside to ensure privacy and security for users
- Close proximity to the house to ensure a sense of security
- Light inside the toilet room to aid visibility
- Access to water and soap within the toilet room
- A closeable waste bin for disposal of sanitary pads
- A mirror to assist with managing menstruation (e.g. checking for stains)
- Drying rack for reusable menstrual pads (if desired by users)

The above is not an exhaustive list. Please consult with people who menstruate in the household to understand their preferences and ideas.

SECTION 2. OPTIONS FOR ONSITE STORAGE AND TREATMENT

This section discusses substructures of a toilet where the faecal waste and water are stored and/or treated on site. In addition to segregating waste from humans, this is the most important part of a toilets function. Selecting the right size for your sanitation storage system is critical and will depend on the number of people in the household, soil type and the system employed.

What is on-site sanitation?

On-site sanitation refers to the management of household greywater (e.g. wastewater from showers, kitchen, basins that has not been in contact with faeces) and blackwater (e.g. wastewater from toilets that has been in contact with faeces). Using 'dry' toilets eliminates blackwater but still requires safe on-site storage and treatment of faecal matter.

On-site sanitation storage and treatment options vary from 'storage only' options, that require removal of waste offsite for treatment, to storage and treatment' systems that treat all waste on-site, usually through biological processes within the soil.

Greywater treatment – **KEEP GREYWATER SEPARATE TO BLACKWATER**

It is recommended that greywater be kept **SEPARATE** *from blackwater (i.e. Water from toilets) to minimize the amount of blackwater that needs to be managed for health and environmental reasons.*

Ground excavation for construction of cesspits and soakaway pits

For personal safety, the recommended maximum depth of a pit is 3 meters. To protect the people digging the pit from ground collapse, it is advisable to support the pit walls with either culvert rings or timber during construction. In addition, to minimize the risk of collapse during excavation, the pit wall should be constructed on an angle as shown in figure below.

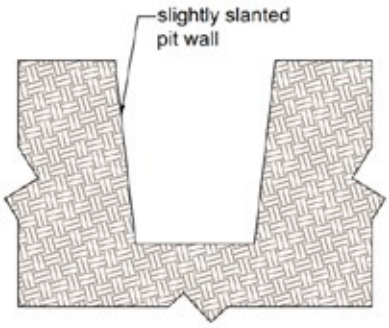

Figure 2. Angled pit walls reduce the risk of collapse during construction

2.1 Sanitation storage and treatment options

Fundamentally, there are two different systems for on-site sanitation storage and treatment.

- **'Dry' sanitation options** avoid the use of water and aim for aerobic breakdown of faecal matter and pathogen removal. Typical 'dry' sanitation storage and treatment options include composting chambers and ventilated improved pits (VIP).

- **'Wet' sanitation options** use water to remove waste and 'seal' the toilet from the

sanitation storage and treatment components to reduce smell nuisance and maintain a hygienic barrier between users and wastewater. Adding water to faeces creates 'blackwater' which needs to be safely stored and treated on-site or removed offsite for safe treatment and disposal. 'Wet' sanitation storage and treatment systems rely largely on anaerobic digestion to break down solids. This produces methane gas, which contributes to global warming.

On-site pathogen removal is done by percolating blackwater into the soil, creating a biological membrane which filters out pathogens. Typical 'wet' toilet options include cesspits, septic tanks, soakaway pits or trenches. In the case of septic tanks, faecal sludge accumulates in the septic tank and is required to be removed at regular intervals (approximately once every 5 – 7 years) and disposed of in designated locations for further treatment and disposal.

2.1.1'Dry' sanitation storage and treatment

This manual recommends 'dry' sanitation systems to reduce water consumption and related costs and to reduce the waste management burden for households and the environment.

2.1.1.1 VIP toilet

What is VIP toilet? A ventilated improved pit (VIP) toilet is an improved pit toilet which allows continuous airflow through the ventilation pipe where it expels odours and acts as a trap for flies as they escape towards the light (Live & Learn Environmental Education, 2015).

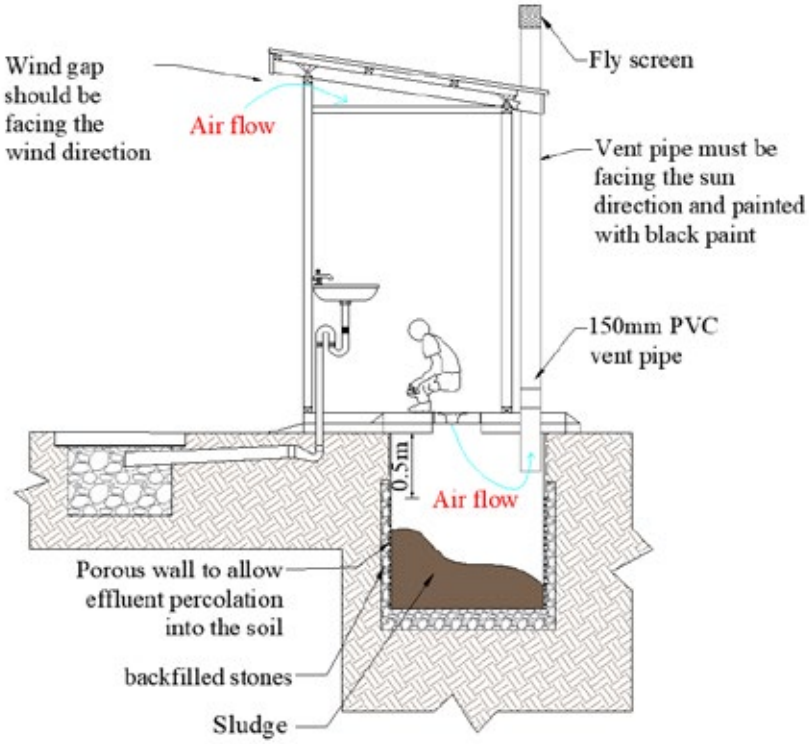

Figure 3. Ventilated Improved Pit latrine (VIP)

How it works

A VIP is similar to a basic single pit latrine with the addition of a vertical vent pipe and features to encourage airflow. Through the aeration (movement of air though the pit and up the vent pipe) in VIPs, flies and odour nuisances are reduced and aerobic digestion of waste is encouraged. Excreta, along with anal cleansing materials (water or solids) are deposited into the pit. Lining the pit prevents it from collapsing and provides support to the superstructure (Live & Learn Environmental Education, 2015).

Design considerations

The vent pipe should have an internal diameter of at least 150mm and reach more than 300 mm above the highest point of the toilet superstructure. It can be made out of PVC, bricks or iron pipes. Care should be taken that objects, such as trees or houses, do not interfere with the air stream, the "wind gap" should face the prevailing wind, and the vent pipe should be situated on the sunny side of the superstructure. The vent pipe works best in windy areas, but where there is little wind, its effectiveness can be improved by painting the pipe black so that it heats up in the sun. The heat difference between the pit (cool) and the vent pipe (warm) creates an updraft that pulls the air and odours up and out of the pit.

A course fly screen with minimum 1.5mm mesh is recommended to reduce clogging with dust. The fly screen should be checked and cleaned periodically to ensure good airflow and function.

To avoid the pit collapsing, the pit should be lined. This can be done with rejected car tyres, stone, coral or cement ring lining and backfilled with rocks. The pit lining should be lined on the external perimeter with geo-textile fabric prior to backfilling with soil to prevent clogging the gaps between pit linings with soil. The bottom of the pit must be at least 2m above the wet season groundwater levels.

For sites that are susceptible to flooding and/or high groundwater levels, the pit can be built up, above ground level and accessed via stairs or a ramp to an elevated toilet structure.

Dry pit toilets must be elevated if constructed in areas that are prone to flooding or have a high-water table.

Table 3. Advantages & Disadvantages of VIP toilets

Advantages	Disadvantages
• Does not require water for use • Small footprint due to pit under latrine • Significant reduction in pathogens through soil percolation • Flies and odours are significantly reduced compared with pit latrine • Can be built and repaired with locally available materials • Long service life	• Manual removal of sludge/waste is required • Possible contamination of groundwater

Table 4. Operation & Maintenance of VIP toilets

Operation guides	Maintenance guides
• Put sawdust/fire ash after defecating to reduce the odours • The slab should be cleaned regularly • Do not use the latrine building as a shower • Do not pour chemicals such as bleach into the pit. This will kill the bacteria that will help breakdown the faeces.	• Maintain the latrine regularly: • Fill holes made by rodents, frequently patch the embankment around the latrine, maintain the superstructure, etc. • Dig a second pit when the faeces in the first pit reaches around 50 cm below the ground level. The second pit must be located at least 3 m from the first one. • Remove the slab from the first pit to the second pit, and then fill in or securely cover the first pit. Make sure that the slab is not damaged before re-using it, in addition, wash hands with soap or ash after handling the slab. • When the second pit is full, the faeces of the first pit will be well decomposed and safe for manual removal. Decomposed waste may be used as a natural fertilizer if desired. Once emptied, this pit can be put back into service.

2.1.1.2 Dry Pit Sizing

Refer to Table 5 for the recommended pit dimensions for a dry pit. The length, width and depth of a pit is dependent on the number of people using it, the estimated period for which it will be used, annual accumulation of sludge per person and permeability of the soil in which the pit is constructed.

See ***Solomon Islands National Building Code 2022***– *Pit latrines – section 3: calculations of dimensions* for sample calculation of Dry Pit's size.

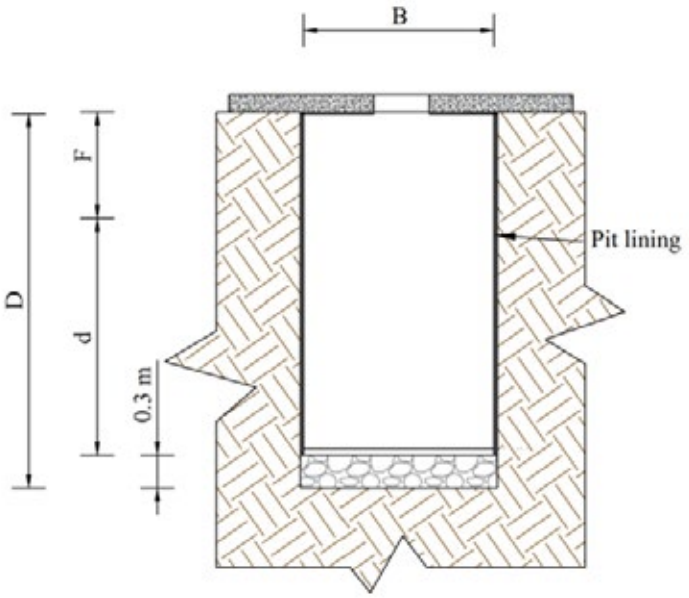

Figure 4. Typical dry faecal storage pit (see table below for dimensions)

Table 5. Dry circular pit sizing calculations

	Dry pit only						
Annual accumulation of sludge/person/year						*0.08 m³/p/yr*	
Users (people)	*Fill time (yrs)*	V: Pit volume (m³)	*B: diameter (m*	F: Free board (m)*)*	Bottom layer (m)	d: Depth (m)	*D: Total depth (m)*
5	3	1.2	1	0.3	0.3	1.5	2.1
6	3	1.44	1	0.3	0.3	1.8	2.4
8	3	1.92	1	0.3	0.3	2.4	3.0
10	3	2.4	1.2	0.3	0.3	2.1	2.7
15	3	3.6	1.5	0.3	0.3	2	2.6
5	5	2	1	0.3	0.3	2.6	3.2
6	5	2.4	1.2	0.3	0.3	2.1	2.7
8	5	3.2	1.5	0.3	0.3	1.8	2.4
10	5	4	1.5	0.3	0.3	2.3	2.9
15	5	6	1.8	0.3	0.3	2.4	3.0

(See figure above for the dimensions provided in the table)

2.1.2 'Wet' sanitation storage and treatment

'Wet' storage and treatment options must treat larger volumes of waste than 'dry' systems due to the water added to the faeces/urine during flushing. The options for storing and treating blackwater safely include cesspits and septic tanks with soakaway pits or trenches.

'Wet' storage and treatment options require a vent pipe to allow air to be released from the pit and a pipe network to connect the toilet to the cesspit or septic and septic to soakaway. Vent pipes should include a vent cowl to prevent water entering the vent and discourage mosquito breeding. Vents should be at least 300mm above the roofline to avoid smell nuisance.

2.1.2.1 Cesspits

Cesspit: is a below ground pit for the disposal of liquid waste and sewage designed to percolate liquid waste into surrounding soils at the same time as digesting faecal sludge. They provide waste storage and treatment until full and need to be either desludged (for off-site treatment) or more commonly, capped and rested to enable on-site treatment through aerobic and anaerobic digestion. Once fully digested, the decomposed/treated waste can be dug out or permanently left in situ if a new cesspit is dug.

Cesspits can be installed either directly under the toilet (direct cesspit) or 'offset' using pipes to transfer blackwater from the toilet to the cesspit (offset cesspit).

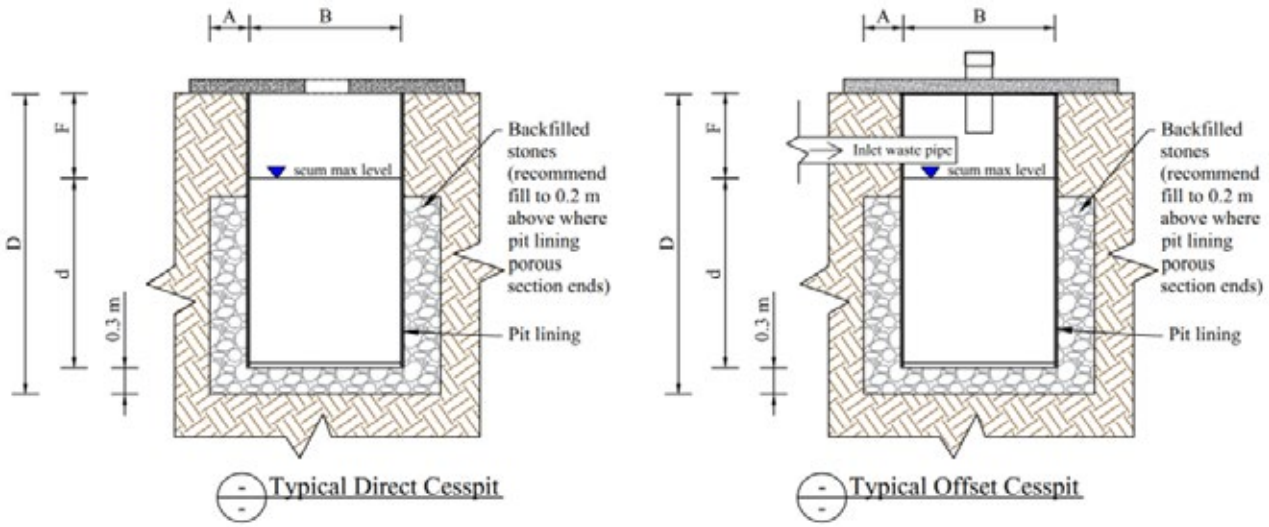

Figure 5. Typical Cesspit arrangements – 'direct' and 'offset'

2.1.2.1.1 Direct drop cesspit toilet

A direct drop cesspit toilet has the toilet placed directly above the cesspit, eliminating the need for plumbing pipework. This system requires the cesspit to be either desludged when full (for off-site treatment) or capped and the entire toilet and superstructure moved to a new cesspit.

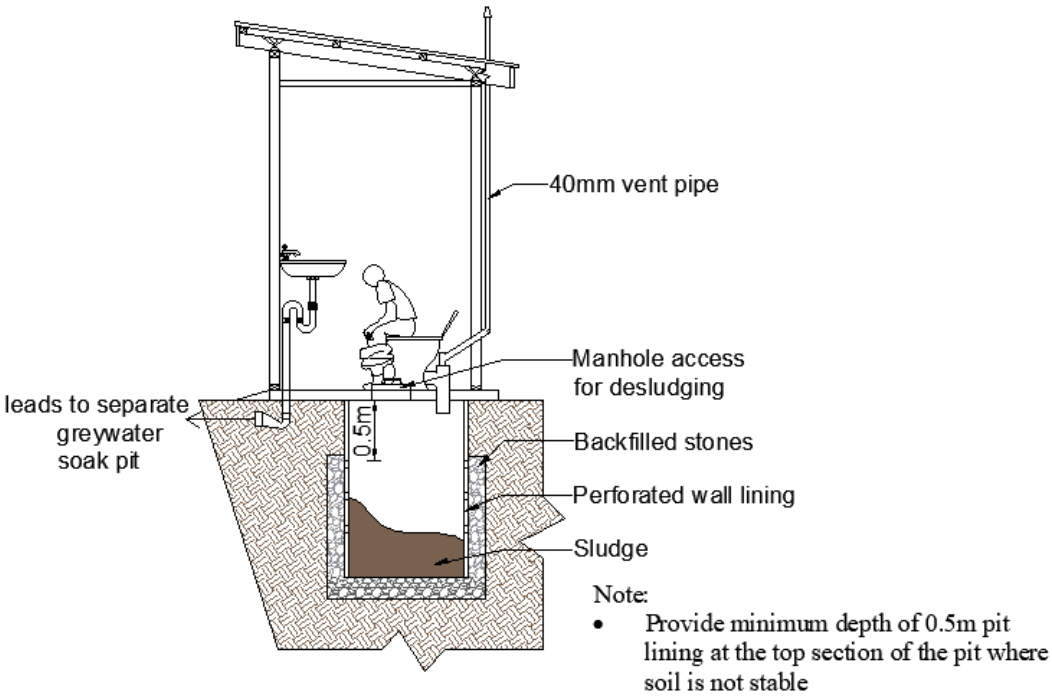

Figure 6. Pour flush direct cesspit toilet

2.1.2.1.2 Offset cesspits

In offset cesspit sanitation storage and treatment, the pit is located at a variable distance from the superstructure and toilet. The toilet is connected to the pit through plumbing waste pipes and fittings including a vent pipe. Offset cesspits can be constructed as 'single' units or with two or more cesspits. Systems with two offset cesspits are commonly referred to as "dual offset cesspits".

Single offset cesspit

The single offset cesspit has the toilet connected to a single cesspit, at a distance from the superstructure and toilet. These systems allow for the toilet and superstructure to remain permanently in place. When the cesspit is at capacity, the pit can be desludged (for off-site treatment) or the cesspit disconnected from the toilet and an additional cesspit dug and connected to the toilet. After a period of one year, the original cesspit can be safely emptied by hand and available for future use.

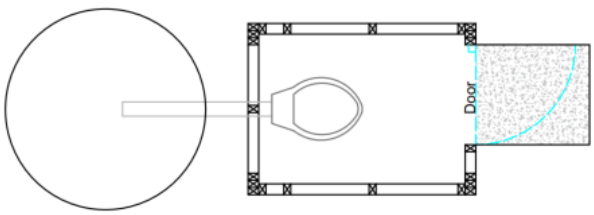

Figure 7. Single offset pit pour flush layout

Dual offset cesspit

The toilet is connected to two offset cesspits. The pits are linked to the toilet by plumbing pipework. This can include a junction box, y-diverting connector or be a single pipe that is moved when one pit is disconnected and the other put into service. The pit layout can be in alternating (Figure 8) or series (Figure 9) arrangement in respect to the inlet pipe from the toilet. Alternating arrangements are recommended as this allows for complete on-site waste treatment, by resting one cesspit, while using the other, and does not require third party desludging.

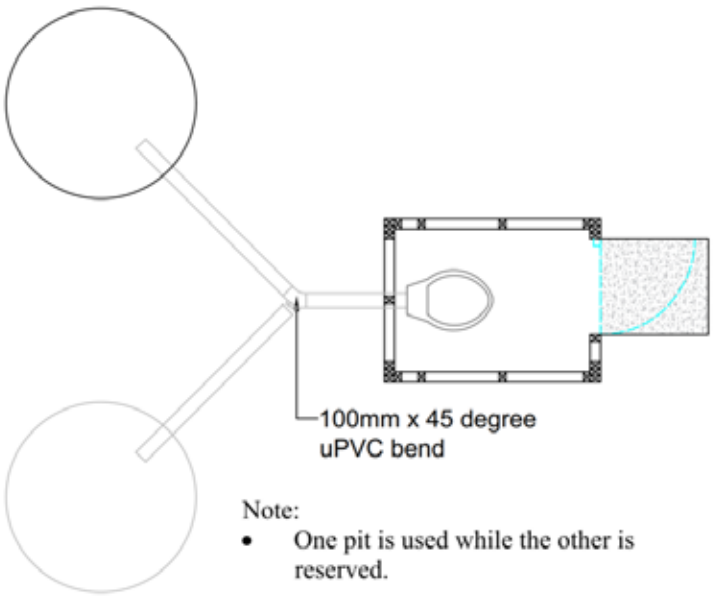

Figure 8. Offset cesspit in 'alternating' arrangement (plan view)

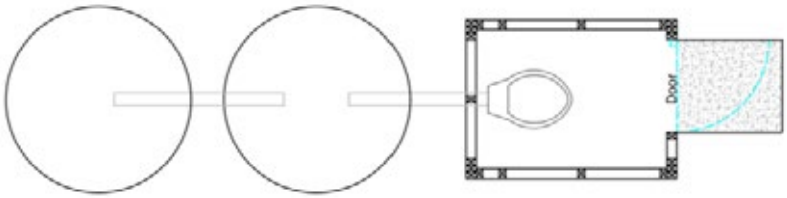

Figure 9. Offset cesspit in 'series' arrangement (plan view)

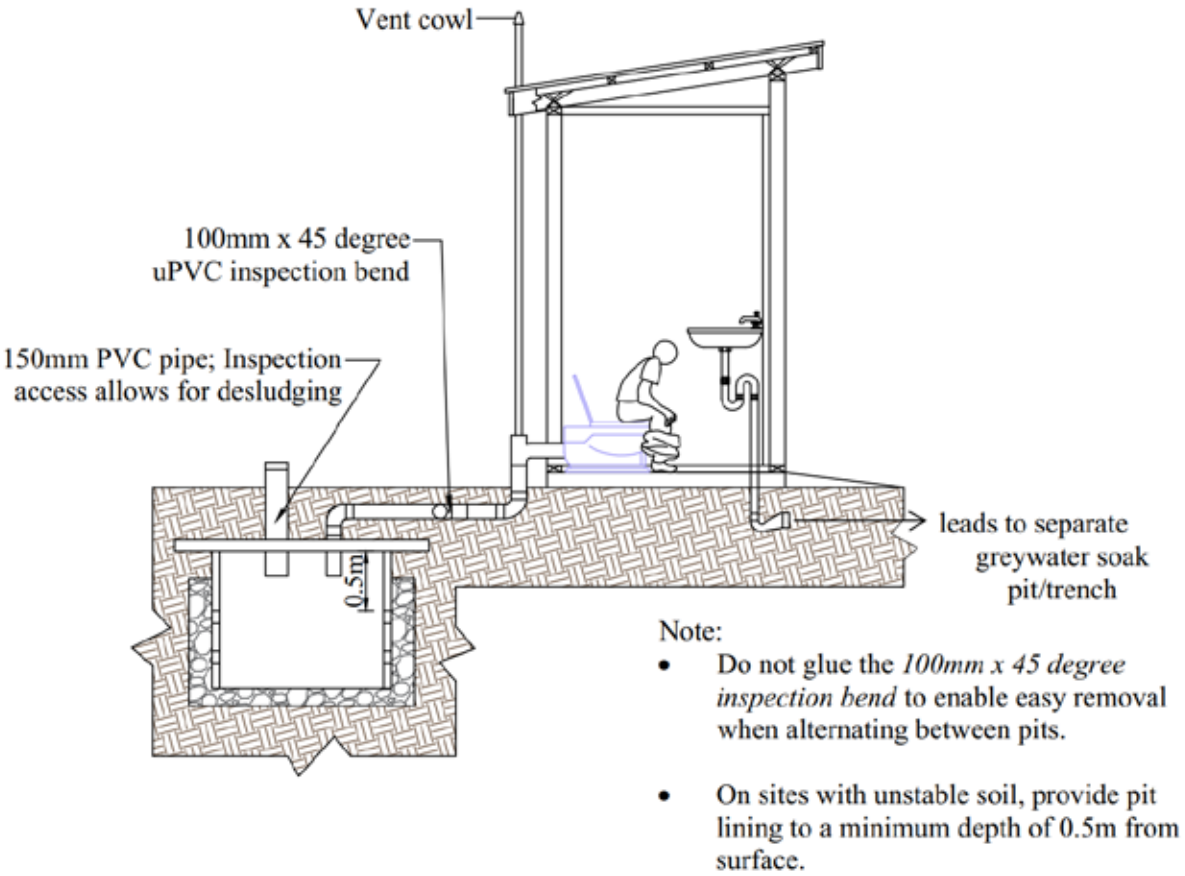

Figure 10. Offset pour flush cesspit toilet

Table 6. Advantages and disadvantages of cesspit toilets

Advantages	Disadvantages
▪ The water seal effectively prevents odours ▪ The excreta of one user is flushed away before the next user arrives ▪ Suitable for all types of users (sitters, squatters, wipers and washers) ▪ Low capital cost; operating costs depend on the price of water ▪ Easy to clean	▪ Requires a constant source of water (can be recycled water and/or collected rainwater) ▪ Requires materials and skills for production that are not available everywhere ▪ Coarse dry cleansing materials may clog the water seal
Single Offset Cesspit	
▪ Cheaper to construct than dual pit ▪ Requires less space than dual pit	▪ Needs to be desludged immediately once full to enable ongoing use

Dual Offset Cesspit	
▪ Superstructure does not need to be moved to empty pit (as it does for direct pit toilets) ▪ Provides redundancy for when one pit is full, the other can be used while the waste decomposes and neutralizes before emptying ▪ Neutralized waste can be safely emptied by hand ▪ Can be located in locations difficult to reach with sludge pump truck	▪ Extra expense to build additional pit ▪ Requires more space than single pit
Alternating	
▪ Second pit can be added incrementally if planned from beginning	▪ Second pit is idle, so additional leach field or absorption trench may be required in clay soils
In series	
▪ Increased percolation rates due to larger subsurface storage volume	▪ Both pits are used simultaneously so new pits need to be dug or system desludged immediately once full

2.1.2.2 Cesspit Lining Options

A pit lining should be added to cesspits to extend their operational life by reducing risk of collapse. Various materials can be used for lining pits depending on local availability and cost. The following section details three recommended options for cesspit linings in the Honiara area. Other lining materials such as stone, coral or hardwood timber (noting a reduced life expectancy compared with more durable materials) are also possible lining options. The figures below show 'offset' cesspit lining options. The same lining options can be used for direct drop cesspits also.

Pit linings must have gaps or holes (of at 25mm -50mm every 200-300mm) to enable percolation of liquids into the soil while providing rigidity to the stone lining and pit wall.

The table of materials listed below for each cesspit lining option outline only the materials required to build each option. The quantity of each material will depend on the size of the cesspit you want to construct for your household.

Cesspit lining options may also be used for soakaway pits.

Empty fuel drum offset cesspit lining

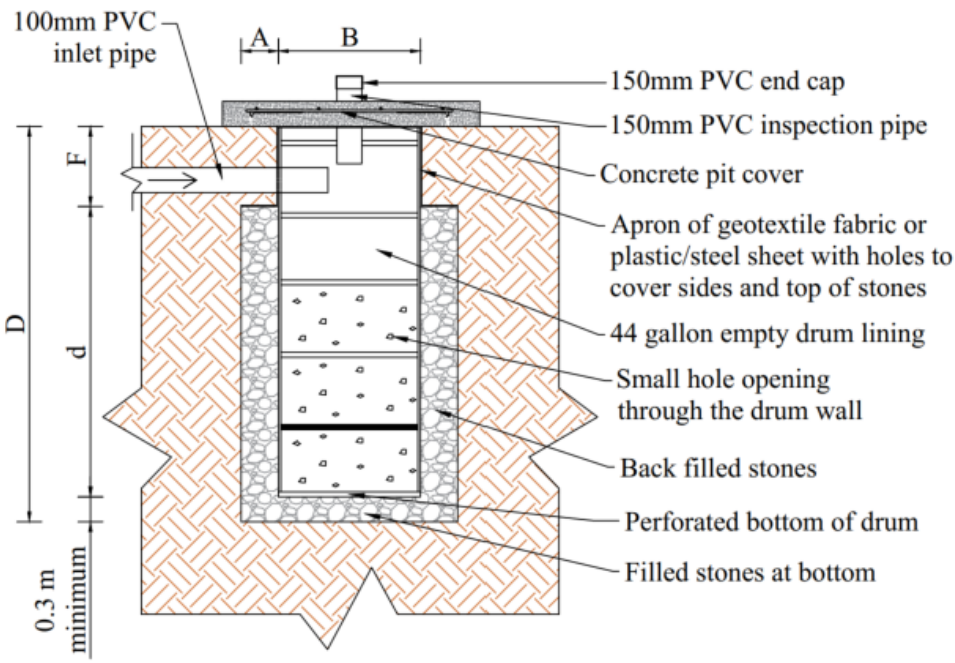

Figure 11. Cesspit with 44-gallon drum lining

Vehicle tyre cesspit lining

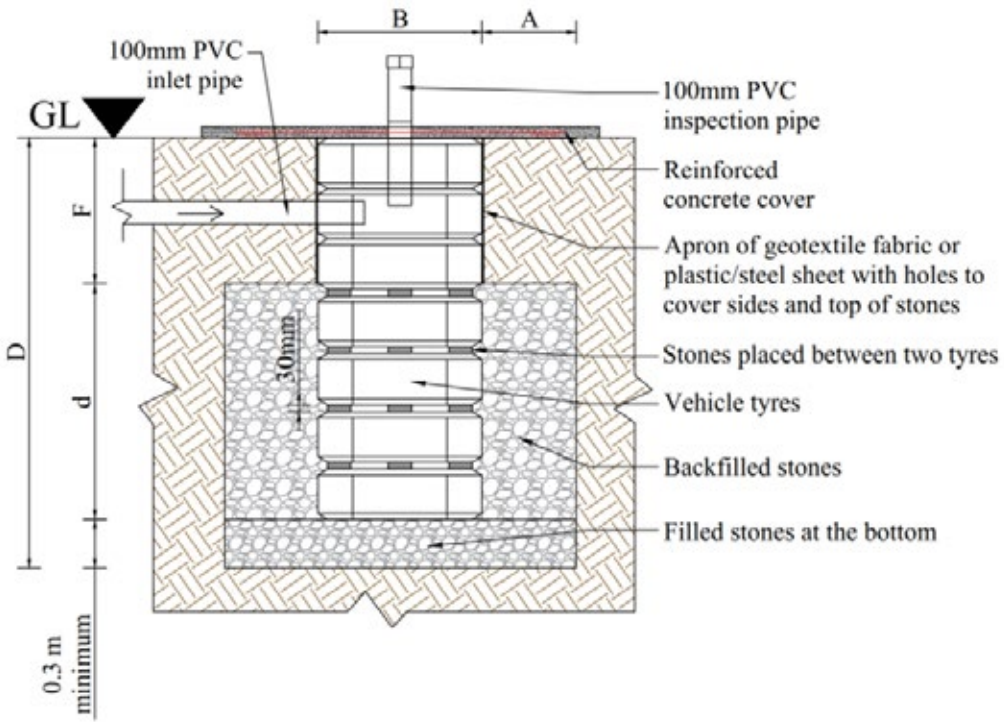

Figure 12. Cesspit with vehicle tyre lining

Cement ring pit lining

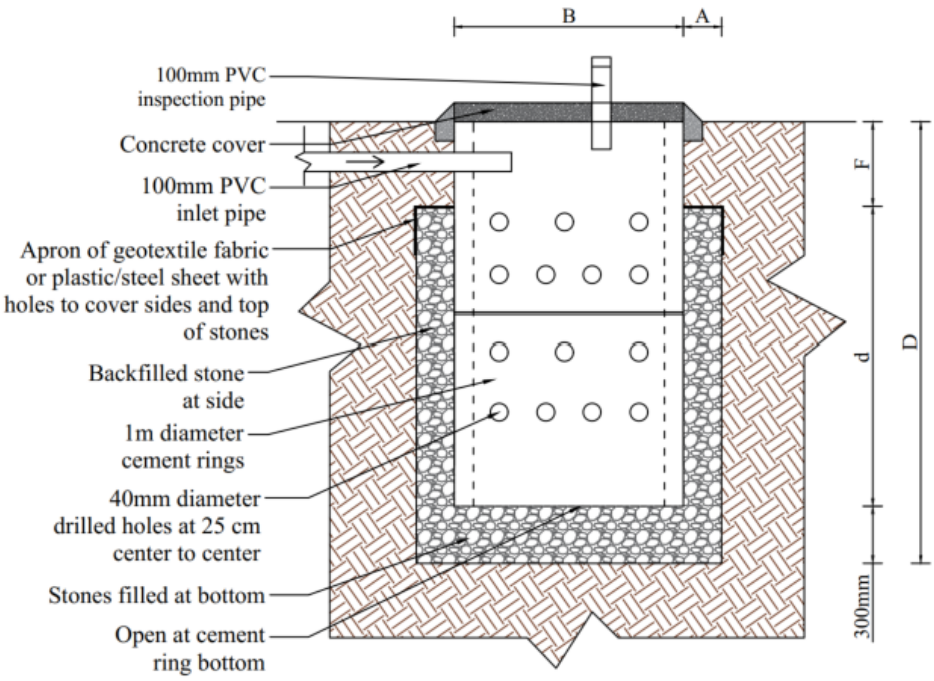

Figure 13. Cesspit with cement ring pit lining

2.1.2.3 Cesspit lining design considerations

Table 7. Cesspit lining design considerations

Cesspits	Design considerations
44-gallon drum	Remove the base and top from all drums except the base of the bottom drum to allow stacking. Create small openings on the drum's side wall and base of bottom drum to allow effluent dispersal. Put stones at the bottom of pit and surrounding the stacked drums. The stones must be stacked carefully to reduce the risk of pit collapsing when the drums are rusted. Drum lined pits are susceptible to cave-in due to rusting drums. Expect a shorter design life than tyres, cement or brick lined pits.
Rejected vehicle tyre	Lay stones (50-100mm) at base of pit for 300mm. Stack tyres from bottom stone layer to freeboard (within 500mm from surface), adding spacers 30-50mm thick between tyres to hold them apart, to allow effluent to percolate out into the backfilled stones. Backfill around the edge of the tyre stack with rocks (50-100mm).
Cement ring	The walls of the cement rings should be custom made; ▪ with 50mm holes at approximately 250mm spacing to allow effluent leaching. ▪ light weight for ease of installation. ▪ with handles for installation Backfill around the edge of the cement rings and bottom of the pit with rocks (50-100mm).
General design considerations	The exterior wall of the pit, between backfilled rocks/stones and soil, should be wrapped with geotextile fabric (alternatively can use construction plastic with holes or old tarpaulin), to reduce soil filling up the spaces between the backfilled rocks of the cesspit. Cover the top of the cesspit with a reinforced concrete slab with minimum 100mm overlap on soil. Create an opening of at least 150 mm x 150 mm in the slab to enable pit desludging. Create a concrete hole cover to close this opening.

2.1.2.4 Recommended Cesspit Dimensions

The length, width and depth of a cesspit is dependent on several variables including; the number of people using it, the estimated period for which it will be used, annual accumulation of sludge per person and the soil percolation rate.

Recommended dimensions for 'wet' pits are provided below. Dimensions are for circular "wet pit" which assumes 0.025 m^3 of annual accumulation of sludge per person for one year. This assumes cesspits receive blackwater only and that cesspit sludge accumulation is about half that of septic tanks receiving blackwater only. This is due to lower sludge moisture content in cesspits. Recommended stone backfill width for cesspits is presented in Table 9.

More detail on this calculation is provided in the ***Solomon Islands National Building Code 2022– Pit latrines – section 3: calculations of dimensions.***

Table 8. Dimensions for circular "wet pit"

	Wet pit only						
Annual accumulation of sludge/person/year						*0.025 m^3/p/yr*	
Users (people)	*Fill time (yrs)*	*V: Pit volume (m^3)*	*B: diameter (m)*	*F: Free board (m)*	*Bottom layer (m)*	*d: Depth (m)*	*D: Total depth (m)*
5	3	1.2	0.70	0.3	0.3	1.0	1.6
6	3	1.44	0.70	0.3	0.3	1.2	1.8
8	3	1.92	0.70	0.3	0.3	1.7	2.3
10	3	2.4	0.70	0.3	0.3	2.1	2.7
15	3	3.6	0.80	0.3	0.3	2.2	2.8
5	5	2	0.70	0.3	0.3	1.7	2.3
6	5	2.4	0.70	0.3	0.3	2.1	2.7
8	5	3.2	0.80	0.3	0.3	2.0	2.6
10	5	4	0.80	0.3	0.3	2.5	3.1
15	5	6	1.00	0.3	0.3	2.4	3.0

Table 9. Recommended Backfill Width ("A") (see 'Figure 5. Typical Cesspit arrangements – 'direct' and 'offset'' for the width 'A' in the table)

Pit lining materials	**Pit depth**	**Backfilled stones width ("A")**	**Comments**
Drums	1.5 m to 2 m	0.3 m to 0.4 m	Backfilled stones are recommended to be filled up to the depth of the free board ('F'). Bottom of the pit should be filled with stones to a minimum depth of 0.3m
	2 m to 3 m	0.2 m to 0.3 m	
Tyres	1.5 m to 2 m	0.4 m to 0.5 m	
	2 m to 3 m	0.3 m to 0.4 m	
Cement rings	1.5 m to 3 m	0.2 m to 0.3 m	Backfilled stones are recommended to be filled up to 0.2 m height above the top set of porous holes in the cement ring. Bottom of the pit should be filled with stones to a minimum depth of 0.3m

2.1.2.5 Septic tanks

Septic tanks are designed to receive black and/or greywater, using gravity and water retention to separate solids from wastewater. Septic tanks accumulate sludge that needs to be removed periodically and treated off-site. Septic tanks discharge blackwater that has undergone primary settlement and retention of at least 24hrs. Septic tank discharge needs to be carefully managed to ensure human and environmental health. Blackwater discharged from septic tanks can be managed via a reticulated wastewater network and treatment system or, commonly, on-site soakaway pits or trenches.

It is critical to size septic tanks depending on the sludge accumulation rate, the number of users on the site, and the planned desludging interval.

Design details

Refer to ***Solomon Islands National Building code 2022*** – *Septic tanks for domestic use – section 3.5* for detailed instructions regarding septic tank design.

The septic tank design is based on a wastewater retention time of 24 hours.

Formula given in Table 10 is used to calculate the volume of a septic tank.

Table 10. Septic tank sizing calculation

Volume = Accumulation of liquids + Solids + Freeboard (AS 1547 – 2012)

Where:
Liquid accumulation = # of users * liquid accumulation/capita/day
Solid accumulation = # of users * annual accumulation of sludge/capita * # years
Freeboard = 10% of tank volume

See guidelines to finalizing the dimensions of a septic tank (WHO & annexure on septic tanks – SI NBC2022).

I. The liquid height between the bottom of the tank up to the outlet pipe level should not be less than 1.2m. A liquid height of 1.5m is even better. A minimum of 0.3m should be maintained between the outlet pipe height and bottom of the cover slab.

II. The inside width of the septic tank should not be less than 0.6m, to allow access inside the tank.

III. The length of the first chamber should be twice its width. The length of the second chamber should be the same as the width. The overall length of the septic tank should be three times its width.

Septic tank sizing

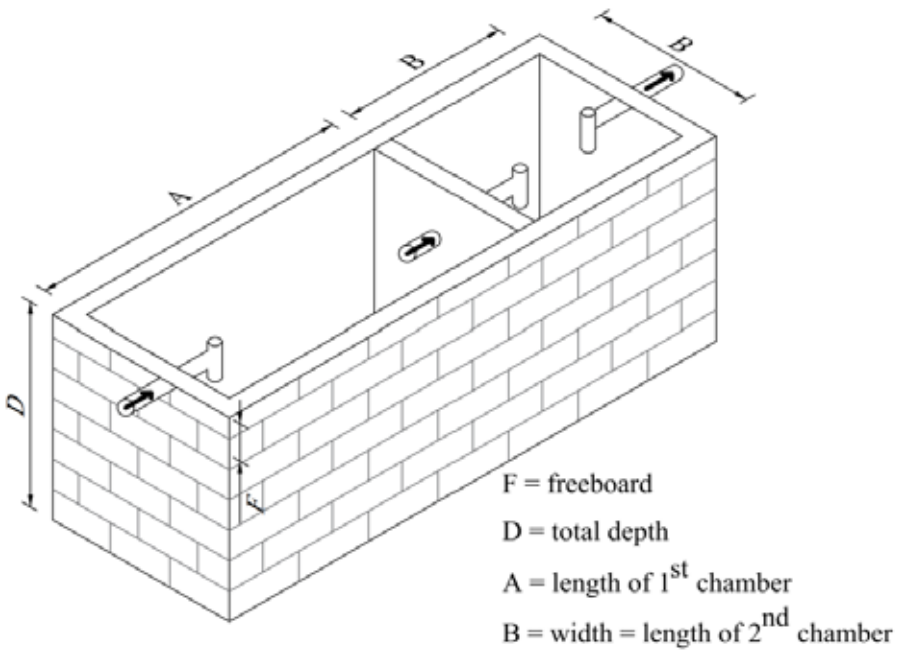

Figure 14. Double chamber septic tank

Table 11. Septic tank dimensions (blackwater only)

Septic tank dimensions (blackwater only)					
No. of users	V(m^3)	B	A	D	Fill time (yrs)
5	1.54	0.8	1.6	0.8	5
8	2.46	1	2	0.8	5
10	3.08	1	2	1	5
15	4.62	1	2	1.5	5

Table 12. Septic tank dimensions (blackwater + greywater)

Septic tank dimensions (combined blackwater and greywater)					
No. of users	V(m^3)	B	A	D	Fill time (yrs)
5	3.03	0.8	1.6	1.6	5
8	4.84	1	2	1.6	5
10	6.05	1	2	2	5
15	9.08	1.2	2.4	2.1	5

Septic tanks options

i. **Septic tank with concrete brick wall**

This option is a double chamber septic tank made with concrete blocks. Its walls are made of hollow concrete bricks and the bottom is a reinforced concrete slab. The top is covered with reinforced concrete slab with manhole openings (min. 600mm) into each chamber of the septic tank for access.

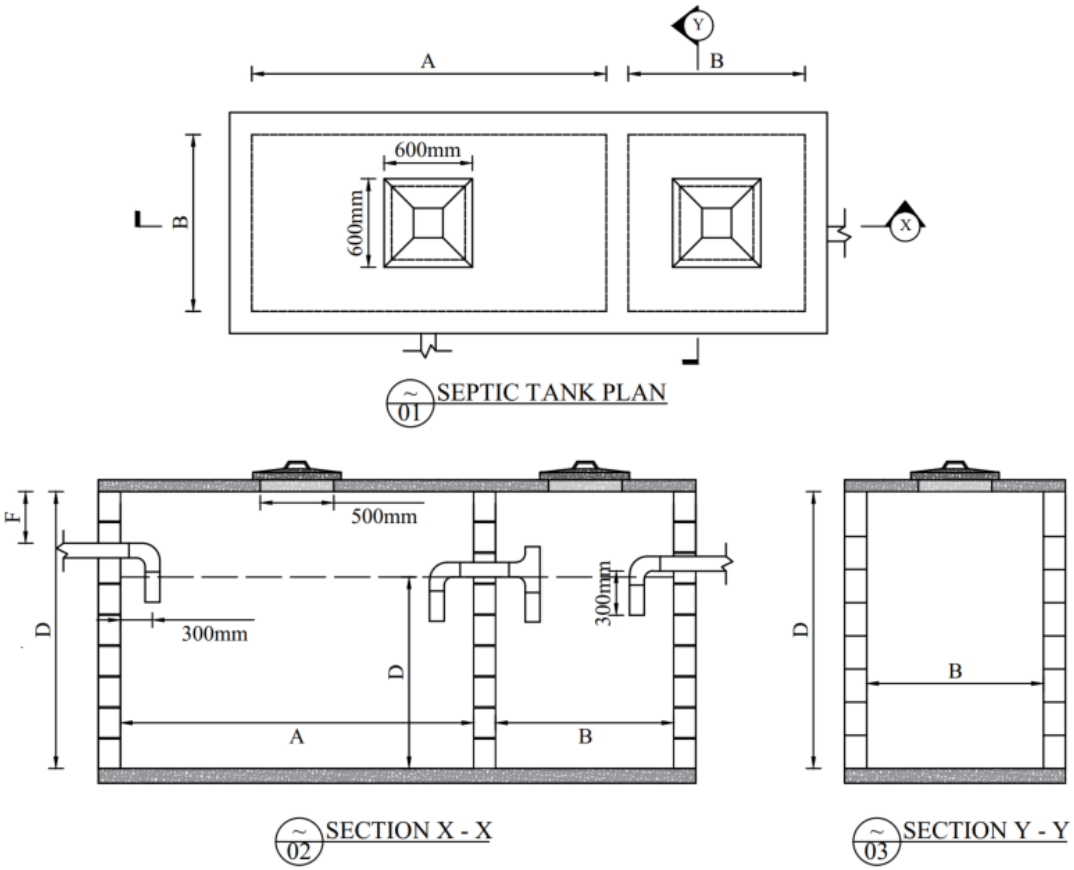

Figure 15. Double chamber septic tank design details

The steel rebar diameter size will depend on the depth of the septic tank. (See NBC 2022 – septic tank for domestic use - table 3.5B)

ii. Roto-mould septic tank

Refer to Solomon Islands National Building code 2022 – Septic tanks for domestic use – section 3.7 for information design for this septic tank option.

Figure 16. Roto-mould septic tank available in 3,000 litre and 1,000 litre sizes

2.1.2.6 Soakaway pits and trenches

What is a soakaway? Soakaways can be pits or trenches and are used to safely dispose of and treat black or greywater beneath the surface. They are critical to reducing pathogen loading through a biological membrane/filter that develops in the soil surrounding the soak away.

It is critical to size soakaways depending on the quantity of water to be treated/disposed and the percolation rates of the soil on site.

Refer to Annexure on septic tanks – SI National Building Code 2022 – sections 6,7 and 8, for further details regarding absorption trenches and soak pits.

Soakaway trench sizing

The trench dimensions provided in tables Table 14 and Table 15 are applicable only if the soakaway trench is connected to a septic tank. This is because the wastewater loading used in the calculation is for septic tank systems rather than cesspits.

The "safe" sizes are deemed the ideal and recommended scenario whereas the "max" sizes are the worst-case acceptable scenario based on the AS/NZS 1547-2012.

Individual soakaway trenches should be a maximum of 30m in length and at least and must be connected in parallel to achieve 'total soakaway trench length'. Each trench should have at least 1meter of undisturbed ground between each trench.

Table 13. Soakaway trench sizing for blackwater + greywater systems (AS/NZS 1547-2012)

Soil type		Infiltration rate (L/m^2/day)	Trench width (m)	Users (per-sons)	Wastewater (l/p/d)	Total Soakaway trench length (m)
Gravel & sand	safe	20	0.6	7	106	62
	max	35	0.6	7	106	35
Loamy soil	safe	10	0.6	7	106	124
	max	15	0.6	7	106	82
silty/clay soil	safe	4	0.6	7	106	309
	max	8	0.6	7	106	155

Table 14. Soakaway trench sizing for blackwater only systems (AS/NZS 1547-2012)

Soil type		Infiltration rate (L/m^2/day)	Trench width (m)	Users (per-sons)	Wastewater (l/p/d)	Total Soakaway trench length (m)
Gravel & sand	safe	20	0.6	7	80	47
	max	35	0.6	7	80	27
Loamy soil	safe	10	0.6	7	80	93
	max	15	0.6	7	80	62
silty/clay soil	safe	4	0.6	7	80	233
	max	8	0.6	7	80	117

Soakaway trench designs

Refer to ***Solomon Islands National Building code 2022*** – *Septic tanks for domestic use* – section 6 for detail design information on soakaway trenches.

Soakaway trench option

i. Trench with backfilled stones

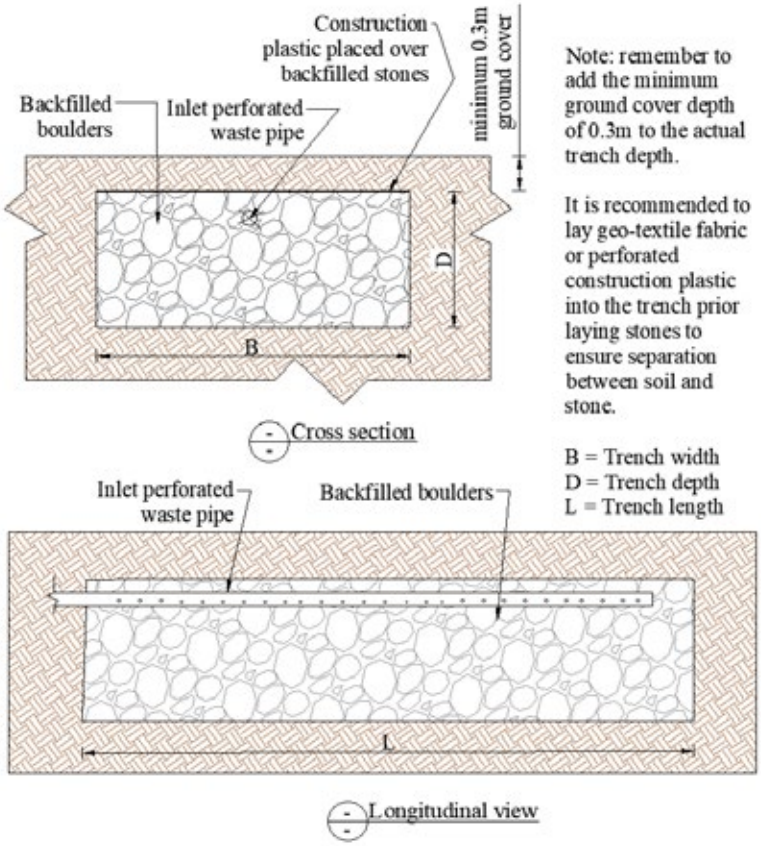

Figure 17. Soakaway trench with backfilled stone details

2.1.2.7 Soakaway pit sizing

In the tables below, the wastewater loading per person for one day is assumed to be 26 liters for blackwater only and 80 liters for greywater.

Table 15. Circular soakaway pit sizing (septic tank outfall - blackwater only)

Soil		Daily absorption rate (L/m²/day)	# People	Wastewater per person per day (L)	Diameter (m)		Free board depth (m)	Total soakaway pit depth (m)
Gravels & sand	Safe	20	7	26	0.6	1.2	0.3	1.5
	Max	35	7	26	0.6	0.8	0.3	1.1
Loamy soil	Safe	10	7	26	1.0	1.4	0.3	1.7
	Max	15	7	26	0.8	1.4	0.3	1.7
Silty/clay soil	Safe	4	7	26	2.3	2.1	0.3	2.4
	Max	8	7	26	1.8	1.7	0.3	2.0

Gravels & sand	Safe	20	8	26	0.6	1.4	0.3	1.6
	Max	35	8	26	0.6	1.3	0.3	1.2
Loamy soil	Safe	10	8	26	1.0	1.7	0.3	1.8
	Max	15	8	26	0.8	1.7	0.3	1.8
Silty/clay soil	Safe	4	8	26	2.3	2.0	0.3	2.7
	Max	8	8	26	1.8	1.9	0.3	2.3

Table 16. Circular soakaway pit sizing for greywater only

Soil		Daily absorption rate (L/m²/day)	# People	Wastewater per person per day (L)	Diameter (m)	Depth (m)	Free board depth (m)	Total soakaway pit depth (m)
Gravels & sand	Safe	20	7	80	1.0	2.1	0.3	2.4
	Max	35	7	80	0.8	1.8	0.3	2.1
Loamy soil	Safe	10	7	80	1.7	2.5	0.3	2.8
	Max	15	7	80	1.4	2.5	0.3	2.8
Silty/clay soil	Safe	4	7	80	6.0	2.4	0.3	2.7
	Max	8	7	80	4.2	2.3	0.3	2.6
Gravels & sand	Safe	20	8	80	1.1	2.2	0.3	2.5
	Max	35	8	80	0.8	2.0	0.3	2.3
Loamy soil	Safe	10	8	80	2.0	2.4	0.3	2.7
	Max	15	8	80	1.6	2.3	0.3	2.6
Silty/clay soil	Safe	4	8	80	6.4	2.6	0.3	2.9
	Max	8	8	80	4.5	2.4	0.3	2.7

2.1.2.8 Cesspits & soakaway pit linings

Cesspits and soakaway pits dug in sandy or loose soils are prone to collapse. Pit linings are recommended to stabilize the soil surrounding the pit and to enable easy pit emptying if/when required. The selected pit lining option should consider the site conditions and soil type.

Listed in Table 17 below outlines the recommended pit lining for different soil textures and conditions.

Table 17. Recommended pit linings for different soil types

Soil conditions/types	Recommended material for pit lining
Gravels and sand	• Rejected 44-gallon drums with stones (Figure 11) • Rejected vehicle tyres with stones (Figure 12) • Cement ring culverts with porous walls and stones (Figure 13) • Honeycomb brick (Figure 20)
Loamy soil	
Silty soil	
Dense moist clay soil	• Rejected vehicle tyres with stones (Figure 12) • Cement ring culverts with porous walls and stones (Figure 13) • Honeycomb brick (Figure 20) Note: 44 gallon drums are prone to rust in saline soils and are not recommended
Saline soil (Note: the soil texture can be either clay, silty, etc.)	

2.1.2.9 Soakaway pit options

1. **Stone: Pit filled with stones**

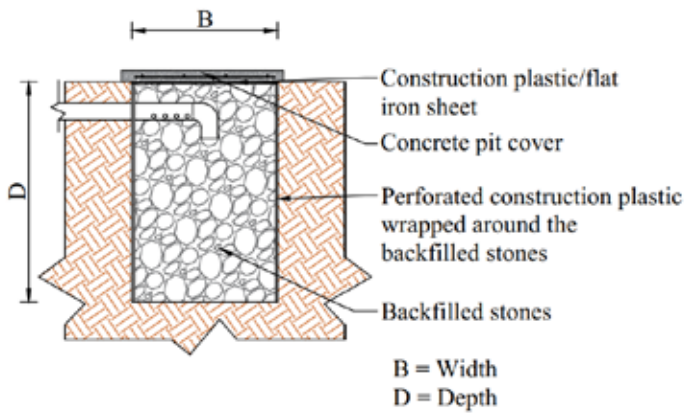

Figure 18. Soakaway pit filled with stones to prevent collapse

2. Tyre soakaway pits: Used car tyres and stones

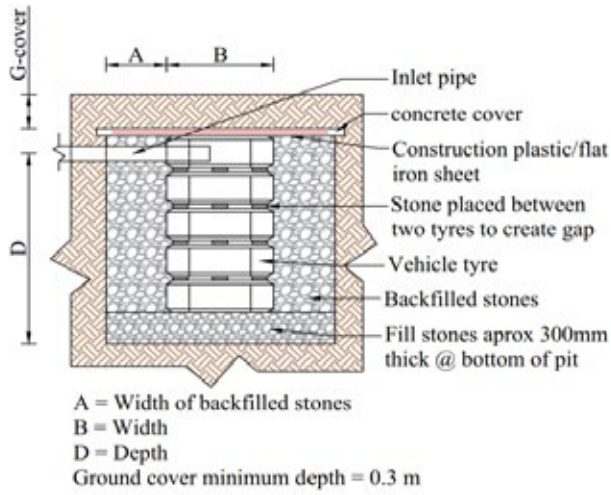

Figure 19. Soakaway pit with tyre lining and stone backfill

3. Honeycomb brick lining & backfilled stones

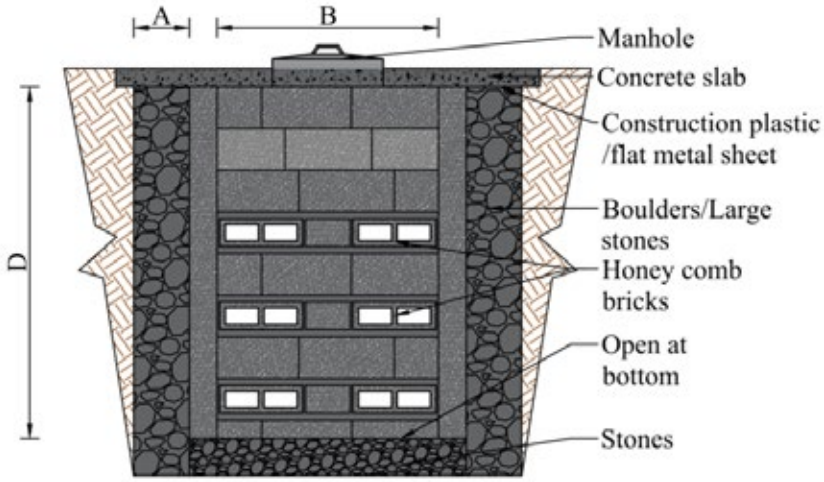

Figure 20. Soakaway pit with honey comb brick lining

2.2 Grease traps for kitchen waste entering greywater systems

Greywater from kitchens includes fats and oils that can accumulate in drain pipes and soakaway pits and trenches causing blockages. To prevent this occurring, a grease trap should be installed close to the kitchen waste outlet to catch the grease from kitchen sinks prior to it entering the greywater or blackwater drain system and soakaways.

A basic grease trap can be constructed with 50-100mm PVC fittings and a concrete or plastic container, ideally with baffles to help settle and retain oils and fats. A grease trap is recommended in all wastewater management systems to reduce long term maintenance costs required to unblock pipes and/or soakaways.

The Solomon Islands Building Manual includes details on grease traps in Section 4 and includes details of a site-fabricated grease trap for domestic purposes sized approximately 600mm x 450mm x 800mm deep to retain fats and oils.

Grease traps should be checked and cleaned every 3-6 months to ensure functionality.

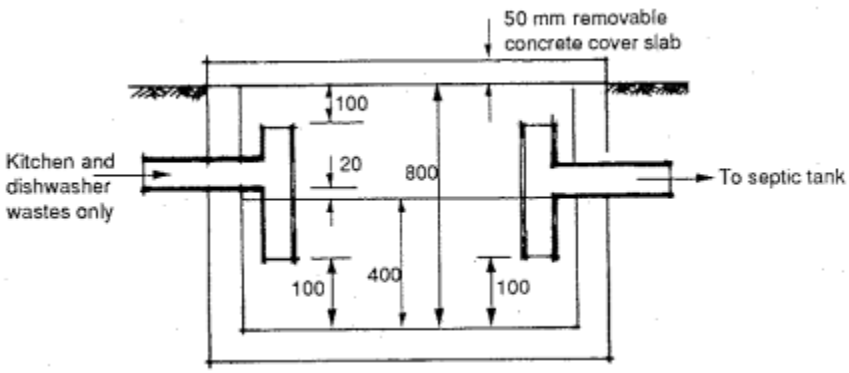

Figure 21. Example grease trap details taken from Solomon Islands NBC (2022)

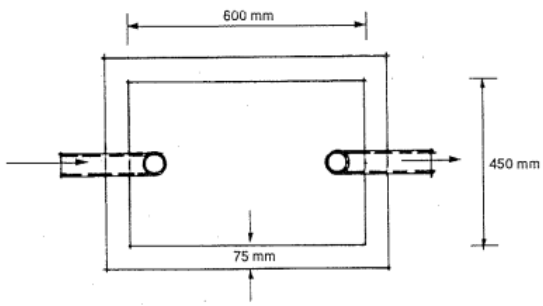

Figure 22. Solomon Islands NBC (2022) grease trap dimensions

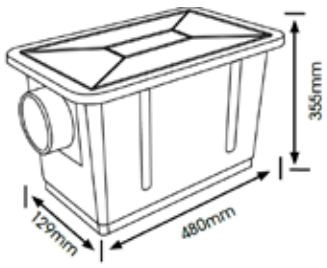

Figure 23. RELN off the shelf household grease trap dimensions with 100mm PVC inlet and outlet, 18 litre capacity.

2.3 Choosing your ideal sanitation storage and treatment options

There are many variables that determine the ideal storage and treatment options for different household including, but not limited to, the site soil conditions, proximity to water sources, groundwater, waterways and neighbouring properties as well as user preferences and available finances.

To assist households and sanitation service providers to make informed decisions about their sanitation storage and treatment options, the following information has been developed.

2.3.1 Solomon Islands sanitation ladder for peri-urban and urban communities

The purpose of the sanitation ladder in this manual is to provide sanitation service providers and households with a suite of household sanitation options that can be improved incrementally to achieve 'safely managed' onsite sanitation options in the Honiara area.

This includes providing minimum standards for household sanitation options to achieve JMP standards of 'improved sanitation', basic and safely managed service levels.

The achievement of 'safely managed' sanitation according to JMP standards is dependent on sanitation service providers, particularly those that desludge septic tanks, having and using appropriate facilities to dump and treat blackwater safely. Management of faecal sludge beyond the household is considered outside the scope of this manual. Therefore, household options that safely store and treat faecal sludge on site prior to removal from site are considered 'safely managed' for the purposes of the Manual and the sanitation ladder below.

Table 18w. Solomon Islands Sanitation Ladder for peri-urban and urban households

	Toilet / Onsite waste system	Solomon Islands sanitation option requirements	JMP sanitation status
	VIP toilet	*VIP toilet with sufficient space to move the toilet and superstructure to a new location and pit once full. Can include alternating pits that are 'rested' prior to manual desludging.*	*Safely Managed*
	'Wet' toilets with cesspit or septic tank with soakaway options	*Any of the "basic" options below can be classified as 'safely managed' if and only if the sanitation service providers have access to and use a 'safely managed' wastewater treatment facility to dump blackwater from de-sludged septic tanks and cesspits.* *OR if alternating pit options are in place with adequate 'resting' of sludge prior to pit emptying.*	*Safely Managed*
	Pour flush / cistern flush toilet with septic tank and soakaway	*Soak away must be functional, sufficiently sized for soil type and septic tank must be desludged prior to backwash/overflow*	*Basic*
	Pour flush toilet with parallel dual cesspit	*Cesspit must be sufficiently sized for soil type and either desludged prior to backwash/overflow or 'rested' while parallel cesspit is put into service*	*Basic*
	Pour flush toilet with single cesspit	*Cesspit must be sufficiently sized for soil type and either desludged prior to backwash/overflow or 'rested' with new parallel cesspit put into service.* *Cesspits must be rested for minimum 12 months prior to manual emptying.*	*Basic*
	Pit latrines with basic slabs	*Not supported*	*Basic*
	Sharing toilet with neighbours	*Not supported*	*Limited*
	Pit latrines without slab	*Not supported*	*Unimproved*
	Open defecation	*Not supported*	*Open defecation*

2.3.2 Solomon Islands sanitation decision tree for peri-urban households

The following decision tree has been developed to assist households and sanitation service providers to choose the appropriate sanitation storage and treatment option for their situation. To use the decision tree, start at the top, and answer the question based on your site location, then follow the arrow that relates to your corresponding answer. Then repeat this process until you reach the bottom of the decision tree where a recommended toilet option is provided.

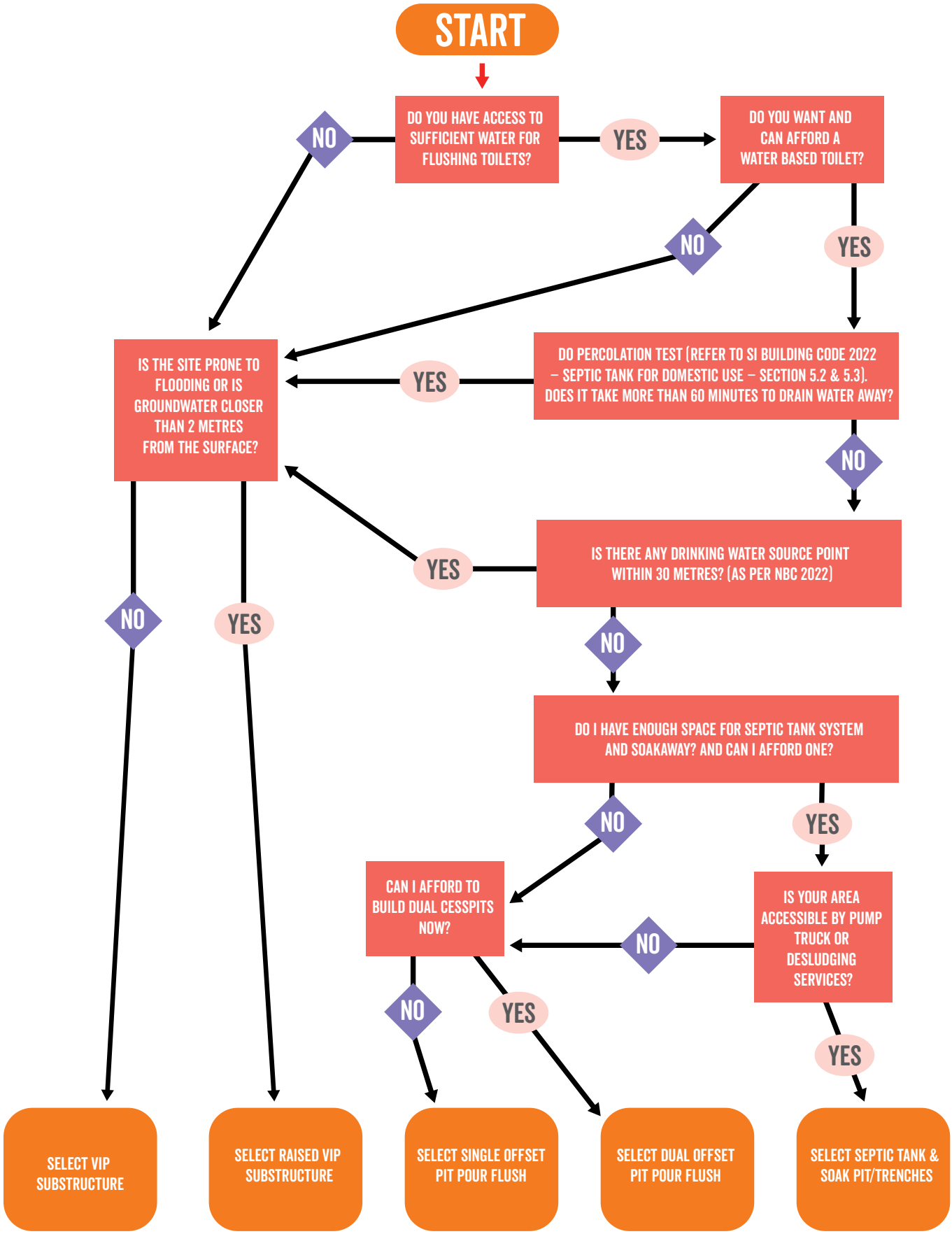

SECTION 3. TOILET SUPERSTRUCTURE

The term "superstructure" refers to the house or walls/roof/door surrounding the toilet. The studs, walling, roofing, door and wall lining, are all parts of the superstructure. The superstructure's primary function is to provide privacy and weather protection to the user as well as support accessibility through provision of handrails, light and water for handwashing and menstrual hygiene management.

Design considerations

There are four superstructure options provided in this manual. The standard materials lists and dimensions provided do not consider additional sizing requirements for wheelchair or other specific accessibility. Structures can easily be made larger to accommodate the specific needs of individual households.

The superstructure should be firmly secured to the slab/ground to avoid failure during occurrences of cyclones and earthquakes. The bottom plates of the wall frame are advisable to be secured to the foundation slab using either M12 x 150mm concrete screw anchors or M12 x 150mm expansion anchor bolts at a maximum spacing of 400mm center to center. This is to resist the uplift force of the superstructure during cyclone and strong winds. Also tie the purlin and rafter to the wall frame using cyclone straps.

3.1 Thao model

The Thao model is an attractive model which is designed and constructed with cheap and accessible construction materials.

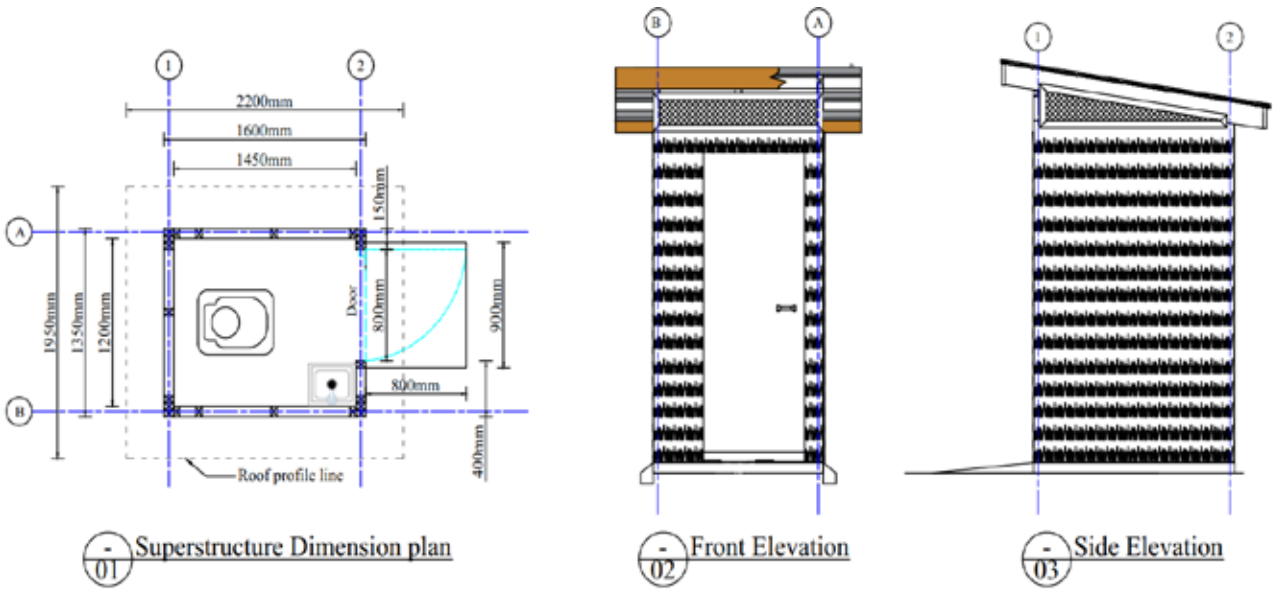

Figure 24. Superstructure dimensions and details Thao model

Table 19. Superstructure – Thao - advantages and disadvantages

Advantages	Disadvantages
• Affordable • Fast to construct • Can be improved over time • Any available materials such as plastic can be used for roofing and walling • Can be scaled for individual accessibility needs as required • Uses mostly sustainable and natural materials	• Roofing and walling materials need replacing over time • Less secure and safe than other options

3.2 Timber clad model

This model is constructed using timber cladding which is abundant, locally available and relatively cheap.

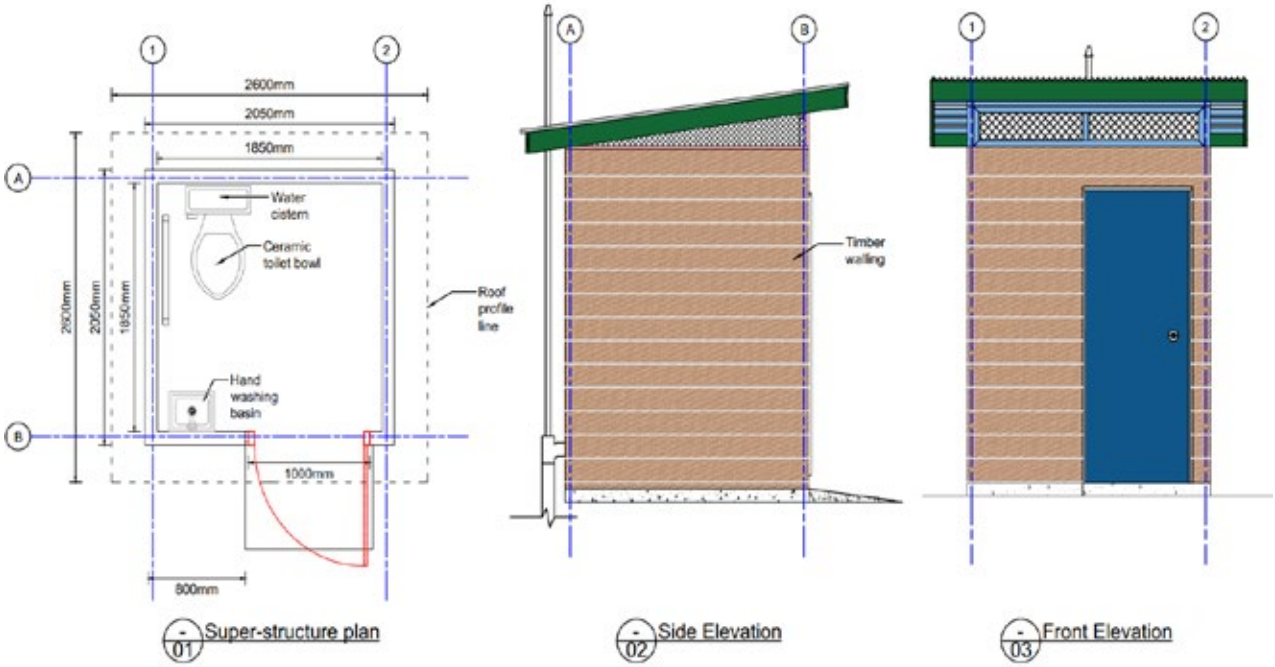

Figure 25. Superstructure dimensions and details - timber cladding

Table 20. Superstructure - timber cladding - advantages and disadvantages

Advantages	Disadvantages
• Structurally sound • Secure and safe • Timber is locally abundant relatively cheap	• Timber is vulnerable to white ants • Roofing materials need to be replaced every 2 to 3 years

3.3 Corrugated iron sheet wall model

For this superstructure option, the wall cladding is made of either colorbond sheets or corrugated iron sheet. It is more structurally sound and durable than the Thao model and less expensive than the brick model.

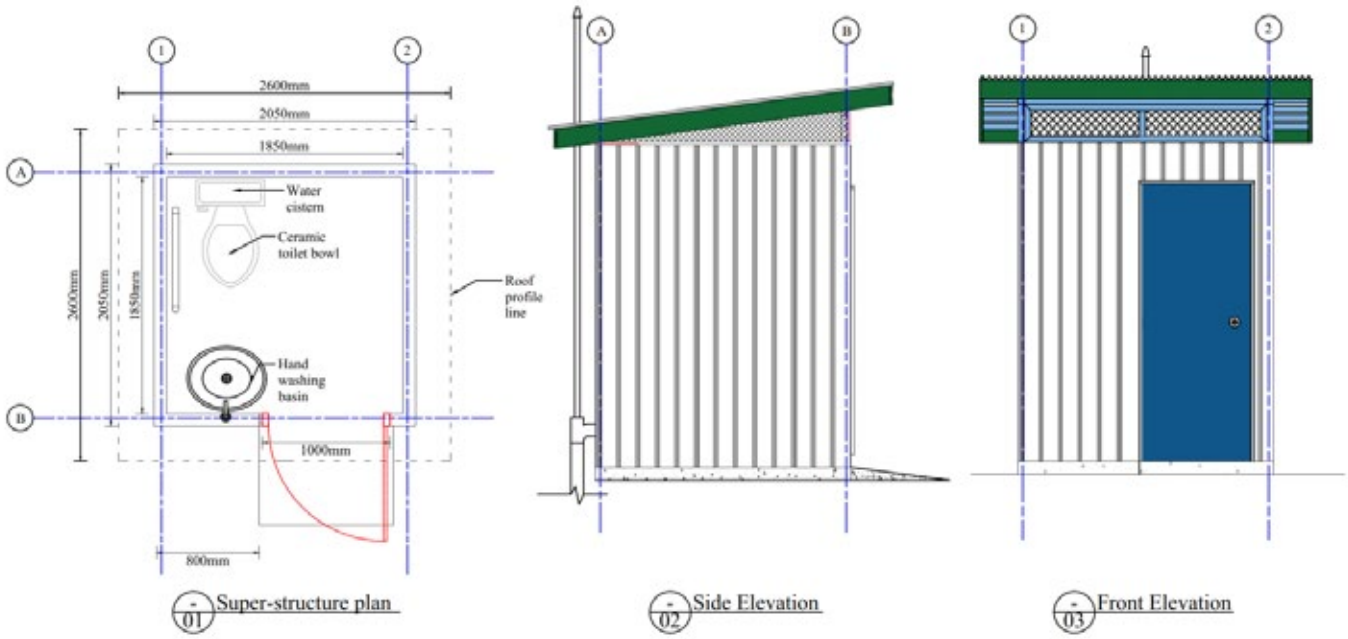

Figure 26. Superstructure - corrugated iron / colorbond cladding and roof

Table 21. Superstructure – iron sheet - advantages and disadvantages

Advantages	Disadvantages
• Durable • Fast to construct • Secure • Inclusive for all users	• Expensive • Timber frame susceptible to white ants • Can be hot if installed in sunny locations

3.4 Toilet & shower room model

This option is ideal for households that want a shower and toilet room under one roof. This model is secure and durable to water and termite resistance due to the use of concrete rather than timber. The addition of tiles can make this a modern bathroom that is permanent in nature and easy to clean and maintain.

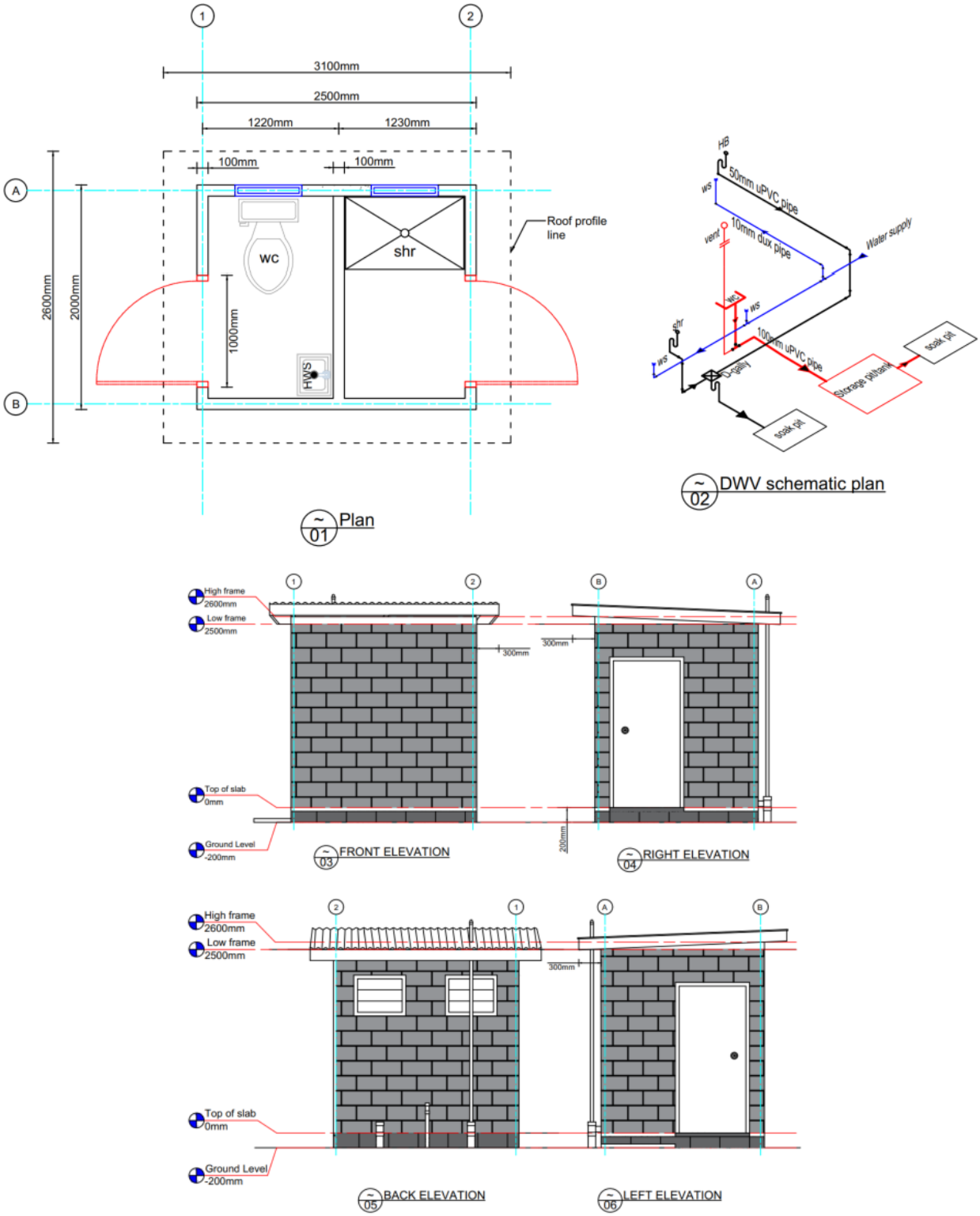

Figure 27. Toilet and shower room - concrete block dimensions

Table 22. Toilet and shower room - advantages and disadvantages

Advantages	Disadvantages
• Durable • Long service life • Can be improved with tiles • Secure and safe • Inclusive for all users	• Expensive • Slower to construct than other models

4.1 Handwashing Facility Setup Options

To ensure the health and hygiene of users, a toilet must have a handwashing facility with water and soap. Shown below are some handwashing facilities that could be set up beside or inside a toilet house. They are locally available, low cost and require minimal water.

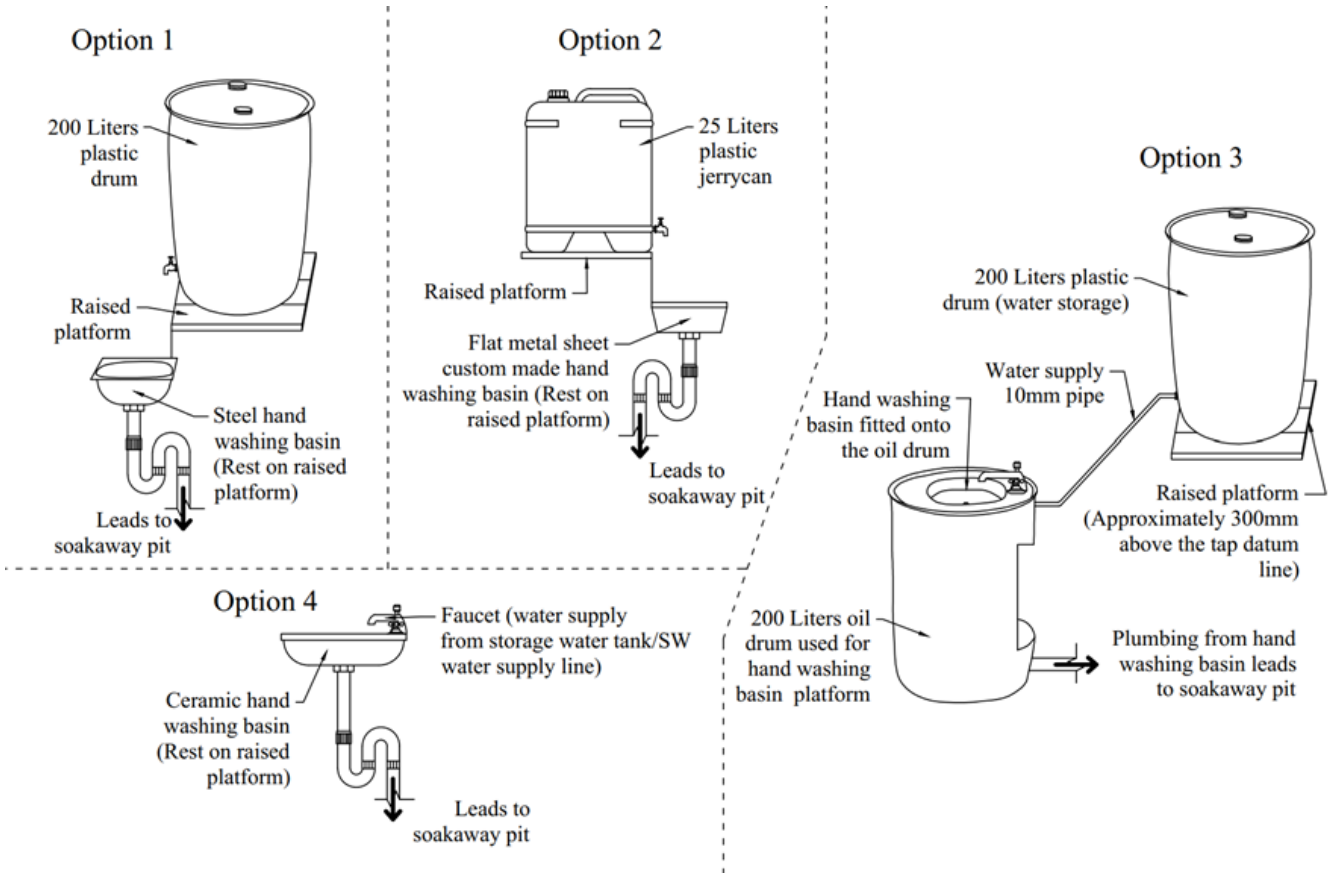

Figure 28. Household handwashing facility options

Table 23. Handwashing facility advantages and disadvantages

Advantages	Disadvantages
Handwashing facility option 1 setup	
• Easy to install • Components are locally available	• Requires manual refilling of the tank with water when it gets empty
Handwashing facility option 2 setup	
• Easy to setup • Materials are locally available	• Requires manual refilling of the tank with water when it gets empty • Installation of tap on recycled bleach drum can leak if not done well

Handwashing facility option 3 setup	
• Suitable for either toilet, school and/or kitchen • Can connect to any water storage tank	• Expensive compared to other options • Requires a plumber to install it • Needs a lot of plumbing materials
Handwashing facility option 4 setup	
• Simple to setup • Cost effective • Has few plumbing materials	• Ceramic handwashing basin prone to damage

Handwashing facilities setup option design considerations

The plastic 200 liters and 25 liters jerry cans should be tied down to the platform on which they are placed to hold them firmly.

The opening of the 200 liters oil drum which is used as a platform for handwashing basin in option 3 should be at the back so that there are no sharp edges exposed and to avoid kids from using it as a step.

Wastewater must be plumbed to a greywater soak pit with shower and kitchen wastewater. The kitchen wastewater must pass through a grease trap prior to entering the soak pit.

Table 24. Handwashing options available locally

Handwashing Basins	Image	Description
Steel Handwashing Basin		Locally available in the hardware stores. Available in various sizes
Ceramic Handwashing Basin		Locally available in the hardware stores. Available in various sizes
Concrete Handwashing basin		Made locally with various designs. Made from bird wire and concrete cement.

To keep blackwater and greywater separate in outdoor toilets, a separate soak pit for handwashing water should be constructed. This is particularly important where dry toilets are being used. A greywater soakaway for handwashing waste can be sized as per the table below.

Table 25. Handwashing wastewater soakaway sizing

GREYWATER ONLY - handwashing soakaway sizing						
Soil type		**Infiltration rate (L/m^2/ day)**	**Trench width (m)**	**Users (per-sons)**	**Wastewater (lpcd)**	**Soakaway trench Length (m)**
Gravel & sand	safe	20	0.6	7	4	2
	max	35	0.6	7	4	1
Loamy soil	safe	10	0.6	7	4	5
	max	15	0.6	7	4	3
silty/clay soil	safe	4	0.6	7	4	12
	max	8	0.6	7	4	6

4.2 Menstrual Health Options for toilet rooms

To create a supportive space for women, girls and people who bleed, toilets should include options that enable hygienic and dignified menstrual hygiene management. The options include;

- Room big enough to allow changing of clothes
- Mirrors to view body (not just face)
- Locks on doors
- Lights on the inside and outside
- Water and soap within the toilet room
- Waste bins for disposal of single use pads
- Drying line if reusable pads are being used and washed
- Shelf/cupboard for storing sanitary items

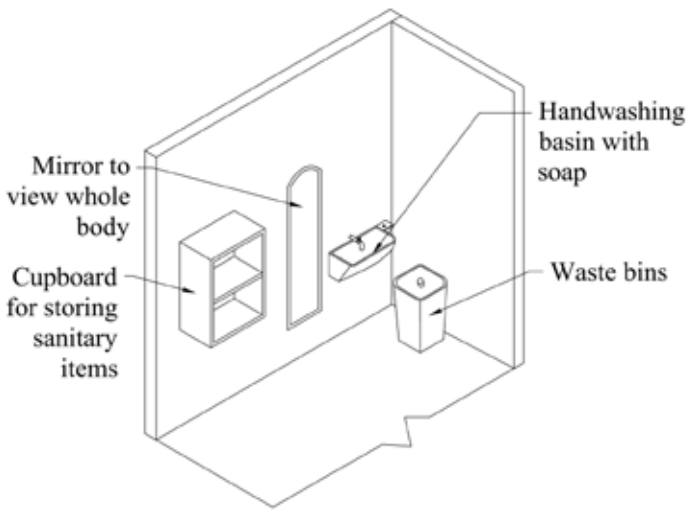

Figure 29. Typical Menstrual health management materials setup in a toilet room

SECTION 5. TOILET IMPROVEMENTS AND CUSTOMIZATION

This section describes how households can improve their existing sanitation and wastewater management systems in terms of usability, privacy, security, effectiveness and environmental and personal hygiene.

Improving existing systems can be a cost-effective solution to incrementally improving household sanitation to meet the needs of household users and to achieve safely managed sanitation and wastewater management. This section describes seven sanitation improvement scenarios that are commonly possible in peri-urban Honiara settlements.

The substructure material breakdowns provided in the given scenarios are based on households with eight people. If your household is composed of more than eight people, then the dimensions of wastewater management systems should be adjusted accordingly using the tables in section 2 (see tables on cesspit recommended dimensions).

5.1. Separating greywater and blackwater

Separating blackwater and greywater plumbing within the household and wastewater management system is the best way to reduce the volume of effluent to be managed on site and therefore, the risk of environmental contamination and related health impacts.

Separate greywater plumbing combines wastewater from kitchen sinks, laundry troughs, showers and handbasins. Greywater should be plumbed separately to blackwater to a soakaway sized for the number of people in the household.

5.2. Upgrade scenario 1: Addition of a separate soakaway pit for greywater

Some septic tanks and soakaway pits can fill prior to design life due to combined grey and blackwater. Combining the greywater from the shower and kitchen with the blackwater from the toilet increases the wastewater entering the septic tank and the soak pit. In addition, the cleaning detergents such as bathing soaps and bleach often kill the bacteria that help to breakdown the sludge in a septic tank. This can lead to early filling of the septic tank and an increased frequency and cost of desludging for households.

Separating the greywater plumbing from the blackwater plumbing and connecting it to a separate greywater soak pit reduces the load on the septic tank. It also reduces the overall effluent volume and pathogen loading to be managed (because greywater no longer comes into contact with blackwater). This reduces the human and environmental risks on site.

A soakaway pit receiving greywater from a handwashing basin is recommended to be at least 1 meter diameter by 1 meter depth. A greywater soakaway pit or trench receiving all greywater from the household is recommended to be sized according to the recommended dimensions provided under section 2.

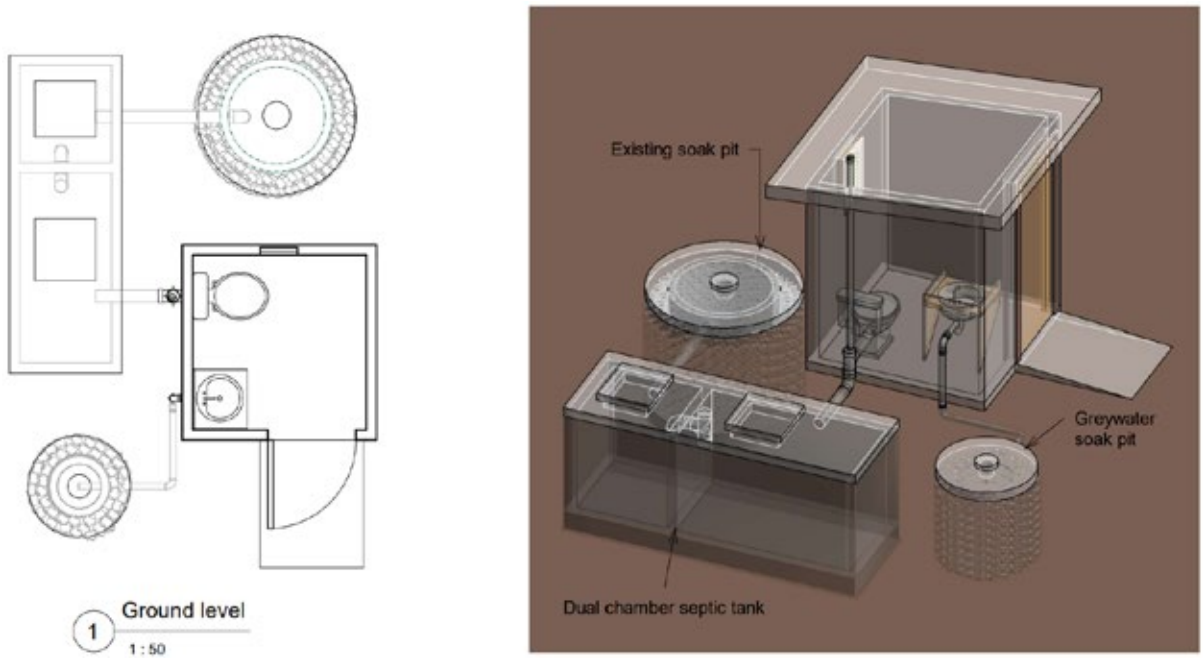

Figure 30. Toilet with separate soakaway pit for blackwater and greywater

5.3. Upgrade Scenario 2: Direct pit improved to offset pit pour flush toilet

Often direct pit toilets are constructed without access for desludging. In locations where space is available to construct an offset, alternating pit, this is recommended to enable gradual improvements to the toilet superstructure. Having offset pits provides flexibility to move the toilet room location at any time and also allows easy access for desludging. The offset faecal storage pit can be easily desludged and then reused.

Adding a second, alternating offset pit allows for manual desludging (after resting sludge for 12 months) which gives households the option of managing their pit emptying themselves, at lower cost than engaging desludging contractors.

This improvement can also include adding a separate soakaway pit for greywater as shown above.

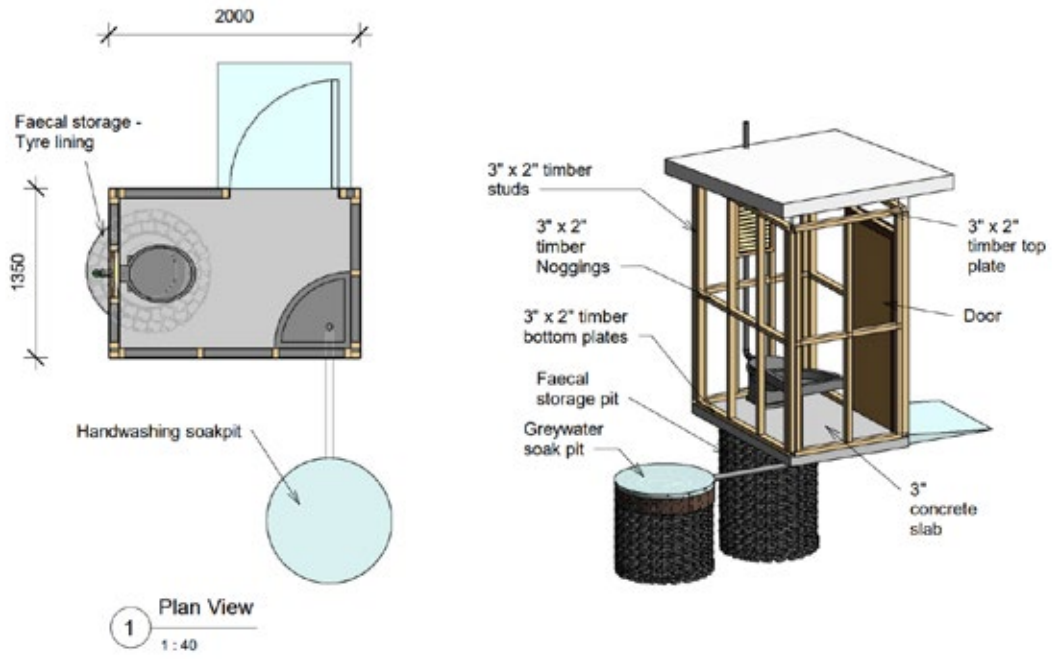

Figure 31. Typical direct single pit toilet setup

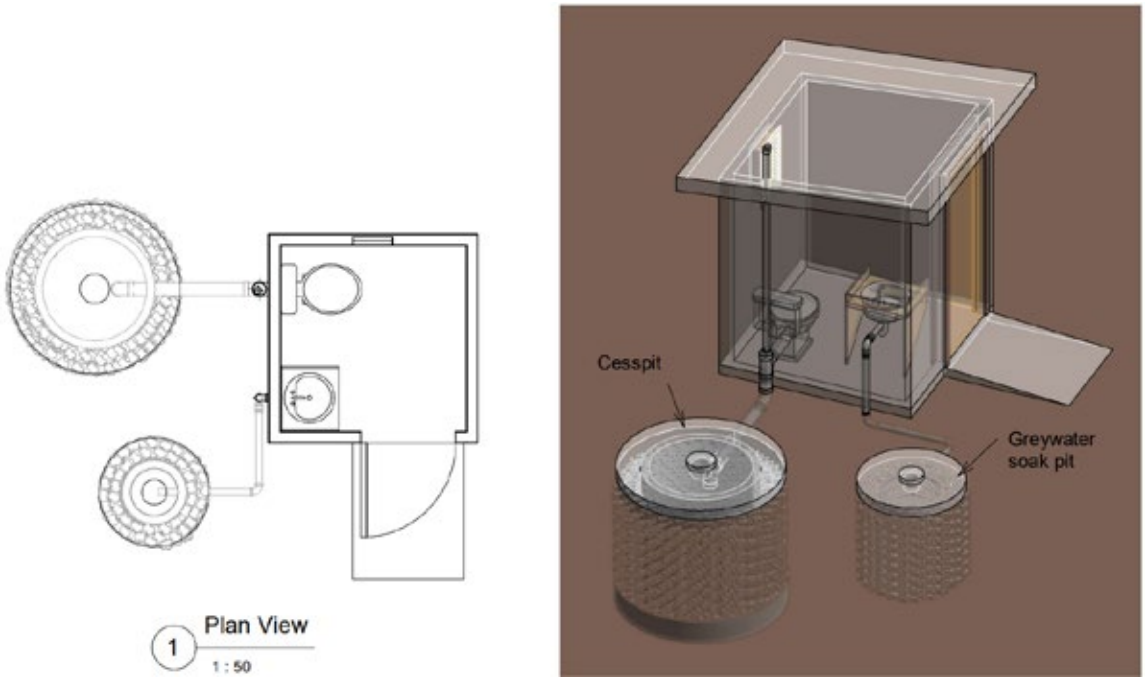

Figure 32. Recommended upgrade to offset pit with separate greywater soakaway pit

5.4. Upgrade Scenario 3: Single offset pit improved to dual offset pit

In cases where the toilet has a single offset cesspit, a second cesspit can be added either in alternating (recommended) or in series. The initial cesspit might be filling quickly due to an increased number of users, inadequate size of the cesspit for soil type or simply because it has been in service for a long time and is full of sludge.

If connected in alternating arrangement with the existing cesspit; once the new cesspit is connected to the toilet, the existing cesspit can be disconnected and rested (for ~12months) prior to manual or mechanical desludging.

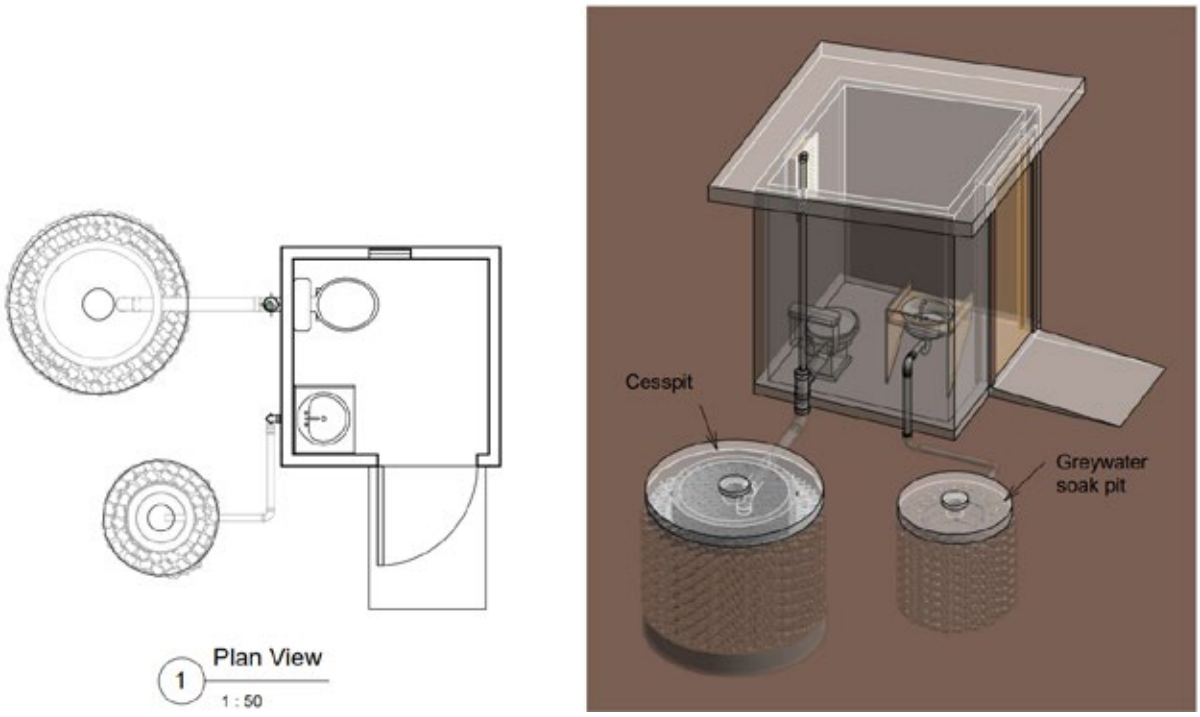

Figure 33. Typical setup of an existing single offset cesspit

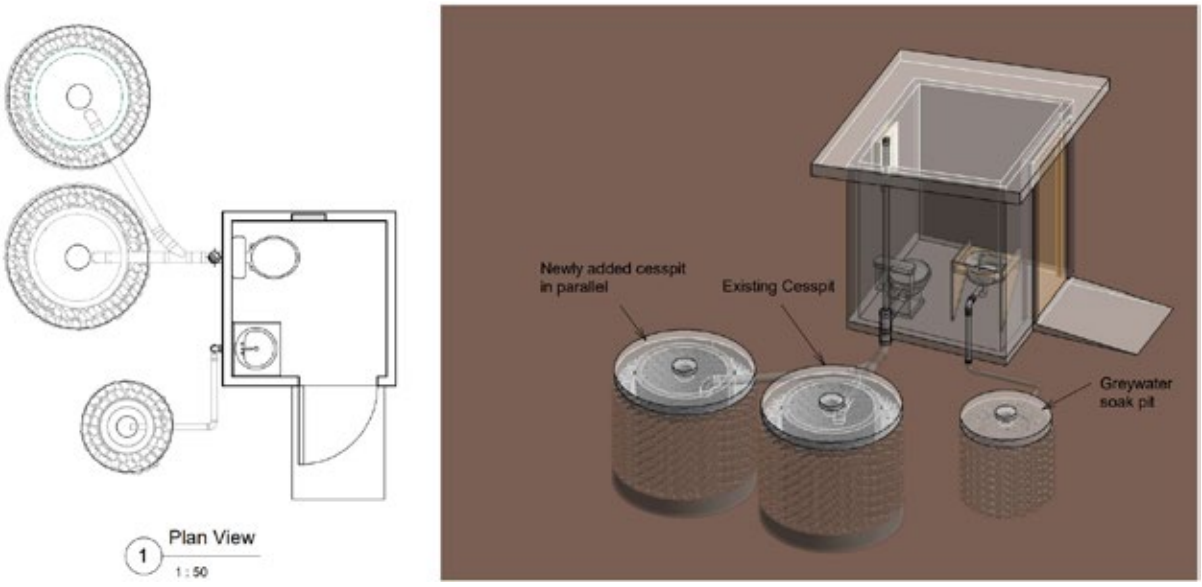

Figure 34. Recommended upgrade to add a second alternating offset cesspit to reduce desludging costs

5.5. Scenario 4: Addition of soakaway pit to cesspit

In situation where the cesspit is often filled up earlier than its expected life span, it is likely that it is being filled with effluent rather than sludge. That is, that the soil cannot absorb the wastewater/effluent as quickly as it is being produced. This could be happening for various reasons, including blockages. It may also be to inadequate cesspit sizing for the soil type or an increased number of users.

To solve this problem, adding an additional soakaway pit in line (series) with the existing cesspit is recommended. This will give more space and surface area for the effluent to percolate into the soil and create more space for sludge accumulation in the existing cesspit. This option will still require the original cesspit to be desludged immediately when full of sludge.

The other option may be similar to the scenario described in 6.4 above, to add an alternating pit in parallel with the existing offset cesspit. This may be sufficient to allow the pits to be used in alternating arrangement, enabling resting and manual desludging of pits.

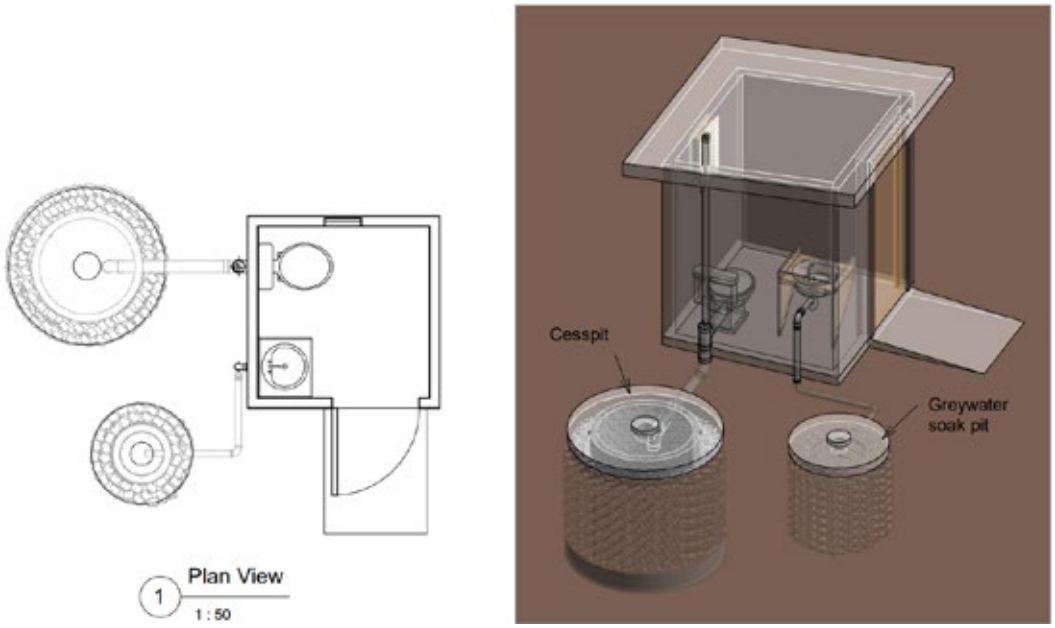

Figure 35. Single offset cesspit arrangement

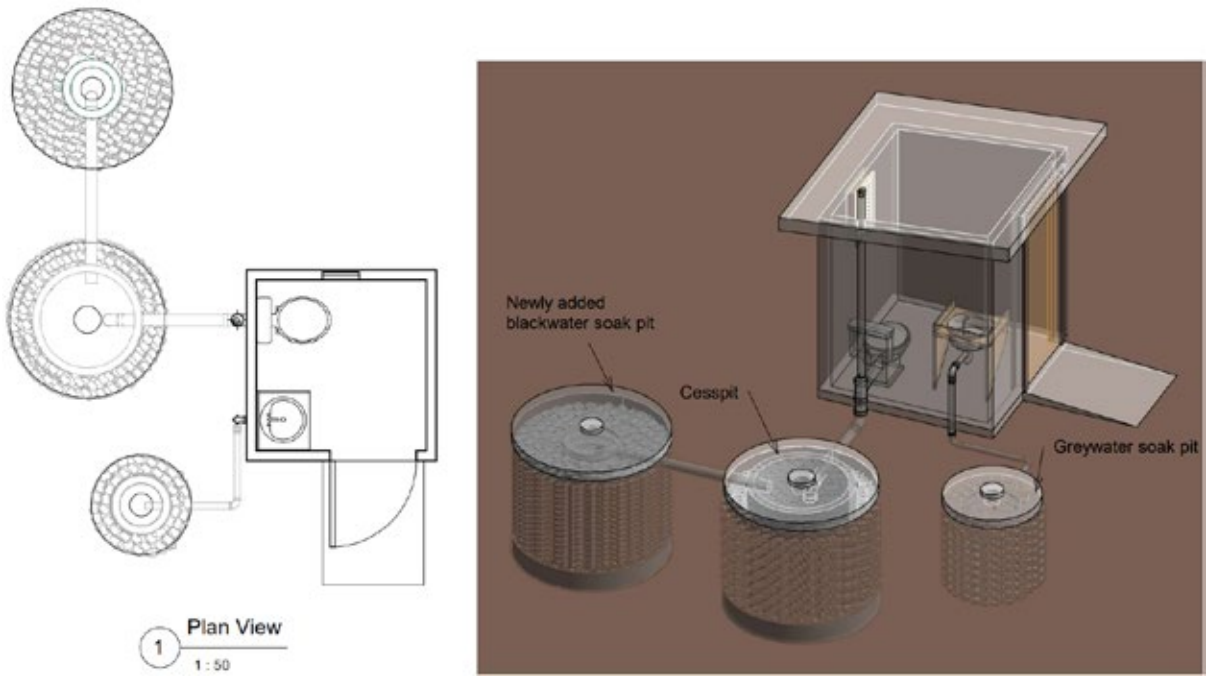

Figure 36. Single offset cesspit with soakaway pit added in series to improve percolation rates

5.6. Scenario 5: Addition of a soakaway pit to septic tank without a soakaway pit

Septic tanks that were built without soakaway pits are likely to be creating an ongoing human and environmental hazard if they are piped to an open drain or elsewhere. Septic tanks without soakaways may also be filling up with effluent rather than sludge, costing the household unnecessarily for frequent emptying of effluent (every 3-12 months) rather than sludge (every 3-5 years).

Installing a well-designed and adequately sized soakaway pit will reduce desludging frequency and ensure the safe disposal of effluent in the soil, creating a safe environment. See Section 2 for the recommended soakaway pit dimensions for the number of users and given soil type for the household.

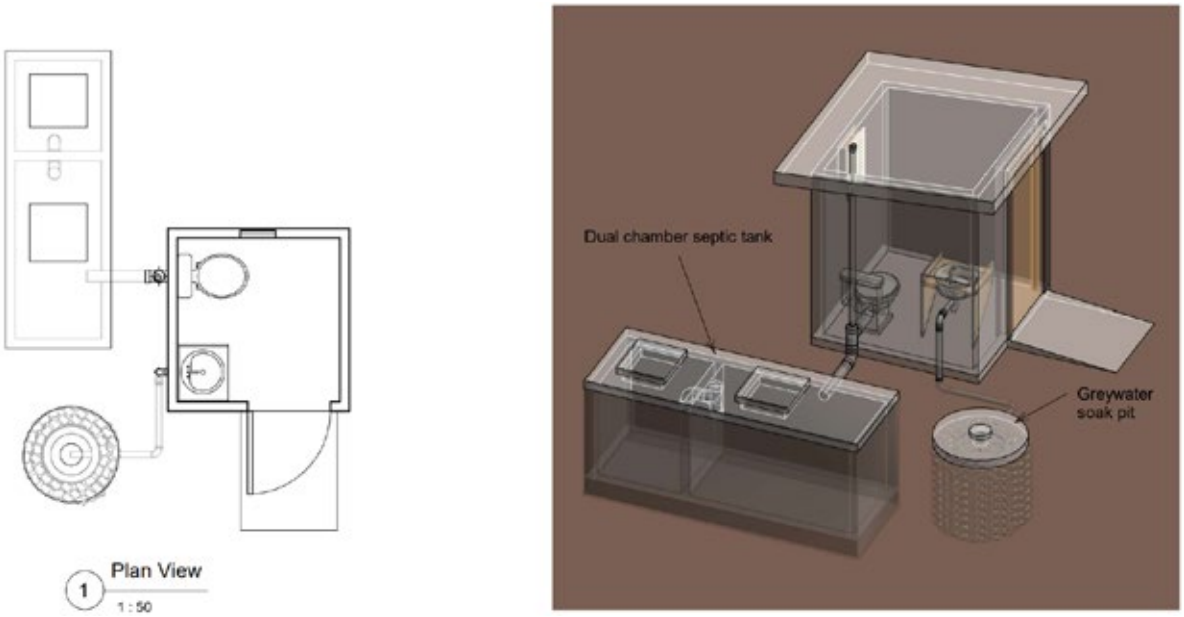

Figure 37. Septic tank without soakaway

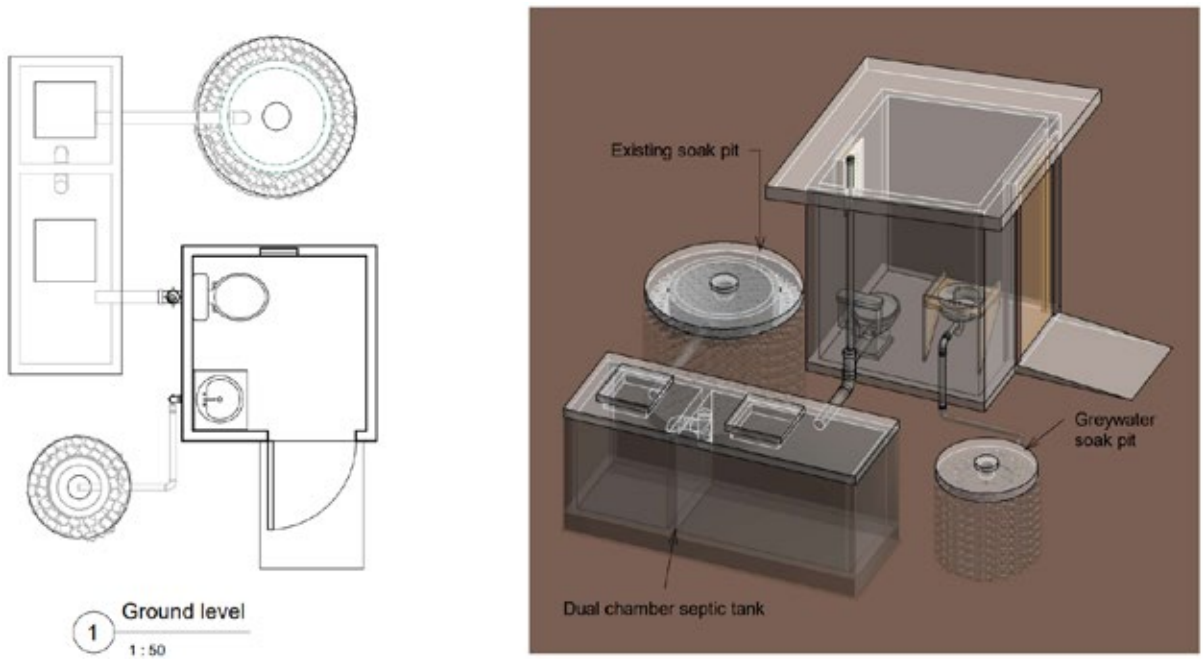

Figure 38. Recommended upgrade to add soakaway pit to septic tank outfall

5.7. Scenario 6: Addition of second soakaway pit to a septic tank

For scenarios where a soakaway pit is connected to a septic tank but often fills up and spills into the surrounding areas, it is recommended to connect an additional soakaway pit to the septic tank. The soak pit is often filled up if the effluent or greywater loading cannot be percolated into the soil fast enough. This may be due to an increased number of users, increased water usage in the household or an inadequately sized soakaway for the soil type and number of users.

Adding a second soakaway pit with correct dimensions for the number of users and soil type will reduce desludging frequency and ensure the safe disposal of effluent, creating a safe environment.

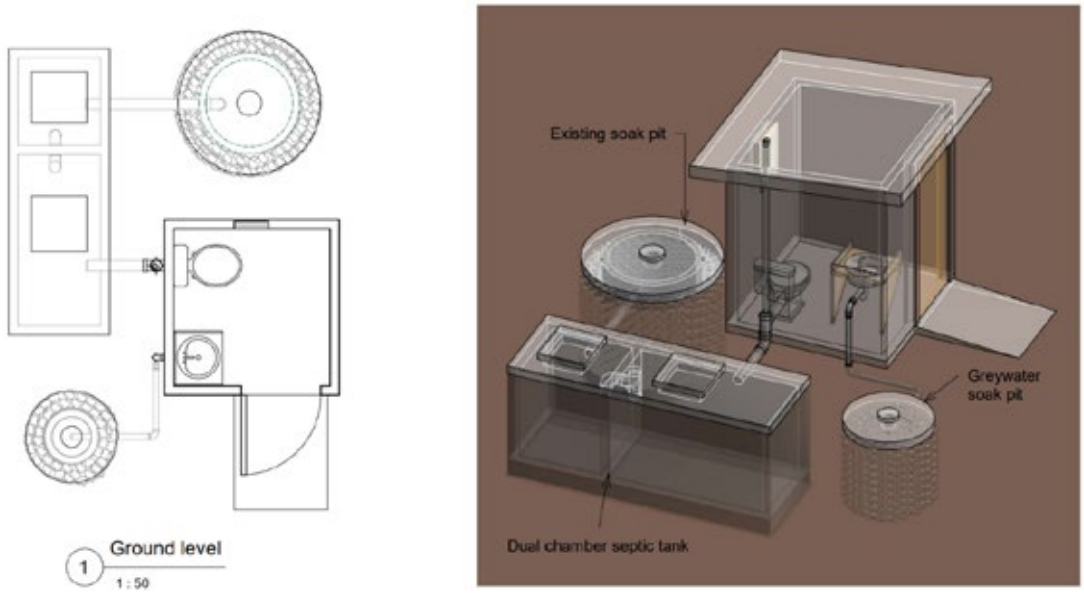

Figure 39. Toilet with septic tank and single soak pit

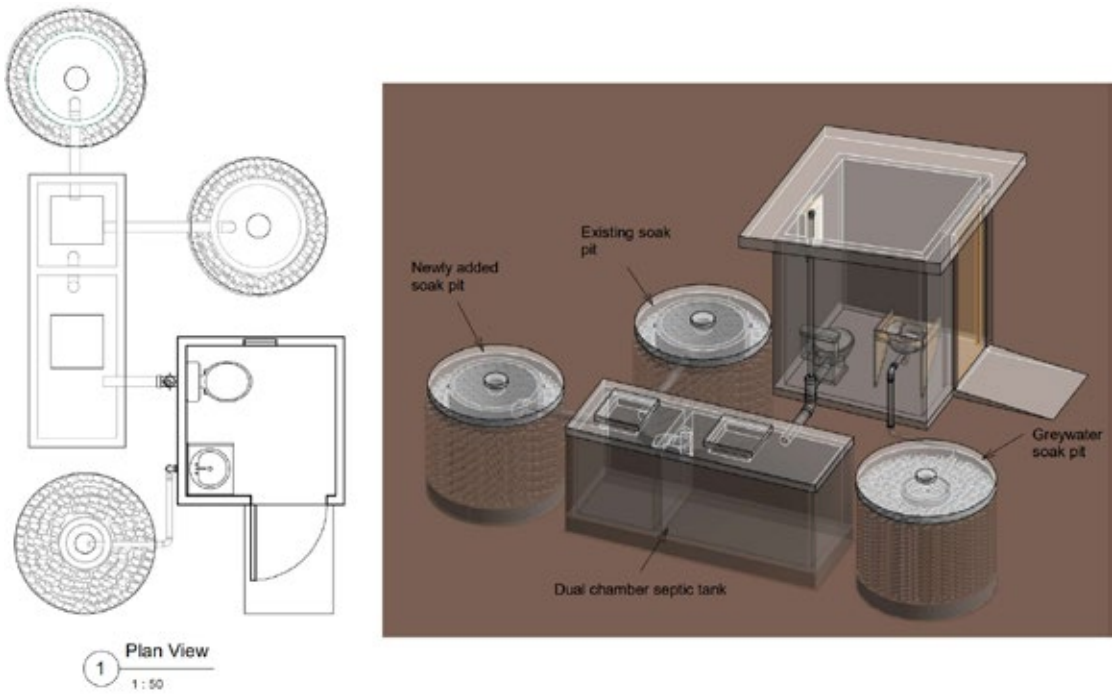

Figure 40. Upgraded waste system with additional soak pit

5.8. Scenario 7: Move the toilet room under/within the first floor of the house

Moving a toilet into or under the house has many benefits including; saving space in the yard, improving accessibility for elderly or disabled users, avoiding bad weather, and increased security/privacy for users. It can also reduce the cost of paying materials for building a whole new superstructure for your toilet.

To do this, it is recommended that the greywater and blackwater be plumbed separately and that the septic tank/cesspit and soakaway be located outside the footprint of the house and connected by 100mm PVC waste pipe buried in the ground.

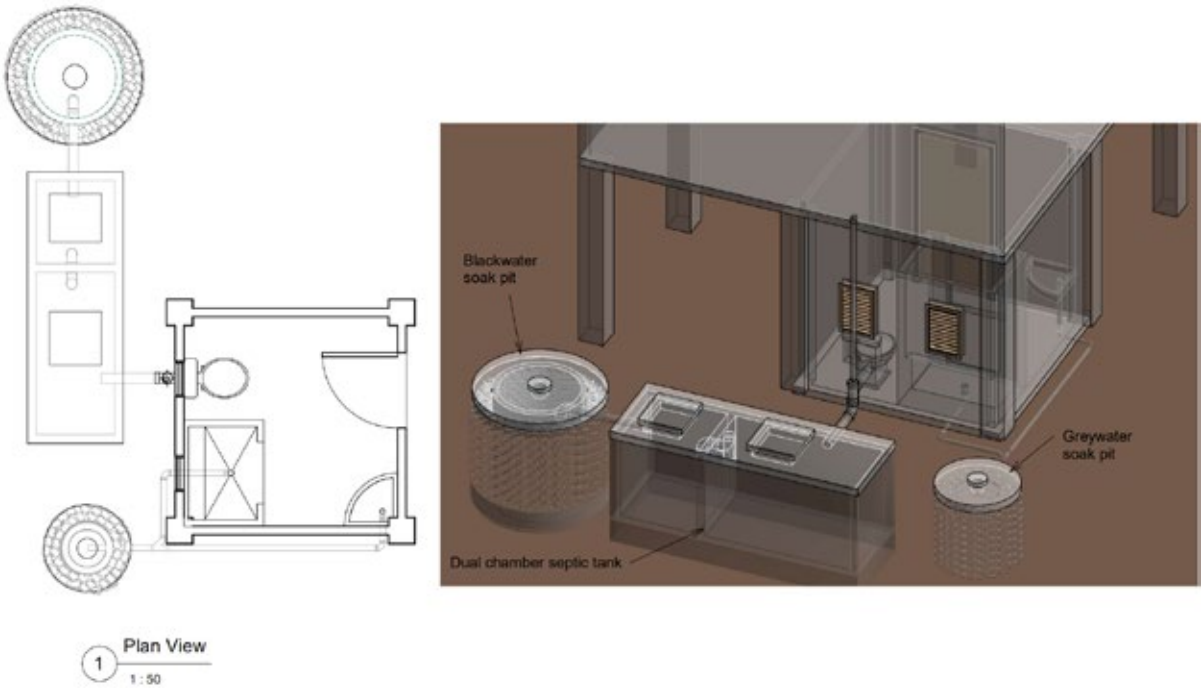

Figure 41. Toilet room added under elevated house

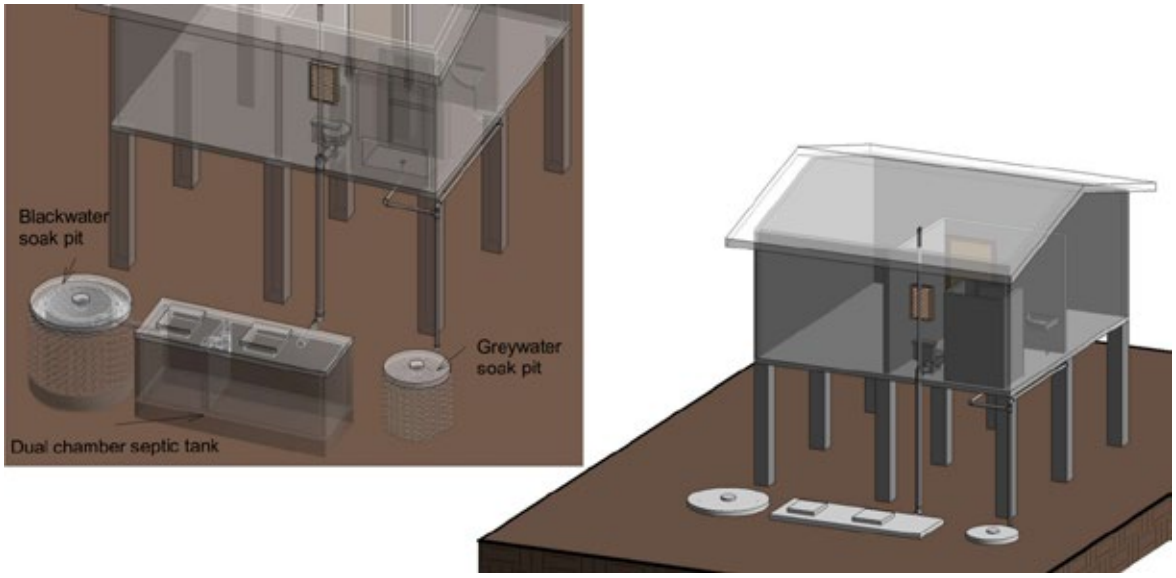

Figure 42. Toilet room can be added inside a house

5.9. Scenario 8: Customized superstructure to accommodate universal accessibility

In the case where the existing toilet is not conveniently accessible by all members of the household, due to a disability or old age, the superstructure can be remodeled to incorporate the features that aide the use of the toilet by everyone in the household. Shown in the plan below is a typical improvement to a superstructure plan to incorporate some universal toilet features. Additional examples of customizations for people with a disability can be found here

https://washmatters.wateraid.org/sites/g/files/jkxoof256/files/Compendium%20of%20accessible%20WASH%20technologies_3.pdf

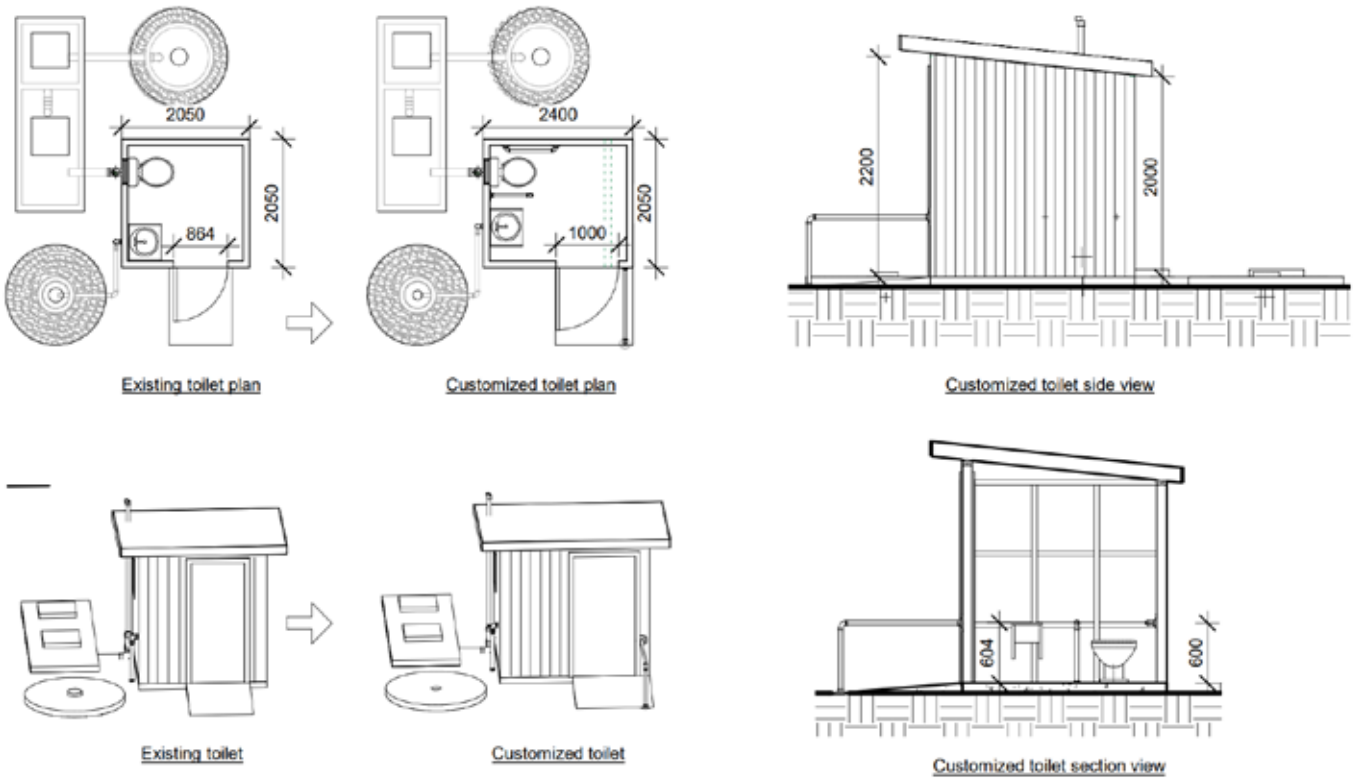

Figure 43. Customisation of toilets to accommodate people with mobility challenges

REFERENCES

Anthonj, C. et. Al. (2015). Urban and rural sanitation in the Solomon Islands: How resilient are these to extreme weather events?

Live&Learn (2011) Clean Communities: A practical guide to building and maintaining toilets in the Pacific. https://livelearn.org/resources/clean-communities-a-practical-guide-to-building-and-maintaining-toilets-in-the-pacific/

WHO (2022) Sanitation.

https://www.who.int/news-room/fact-sheets/detail/sanitation

Solomon Islands Building Manual Pit Latrines (2022)

Solomon Islands Building Manual WASH (2022) –Annexure 1 Septic Tanks for Domestic Use

WEDC / WaterAID Compendium on accessible WASH (2014) https://washmatters.wateraid.org/sites/g/files/jkxoof256/files/Compendium%20of%20accessible%20WASH%20technologies_3.pdf

White (2017). Solomon Islands National Water and Sanitation Implementation Plan http://www.lib.utexas.edu/maps/cia12/solomon_islands_sm_2012.pdf

WHO (2018a). Guidelines on Sanitation and Health. https://apps.who.int/iris/bitstream/handle/10665/274939/9789241514705-eng.pdf

WHO (2018b). Latrines. Latrine Guidelines. https://www.who.int/docs/default-source/documents/disability/accessible-field-hospitals-dimensions.pdf?sfvrsn=181ebd9f_2

WHO / UNICEF. (2020, March 19). Water, sanitation, hygiene, and waste management for the COVID-19 virus. https://apps.who.int/iris/bitstream/handle/10665/331499/WHO-2019-nCoV-IPC_WASH-2020.2-eng.pdf

WHO / UNICEF JMP https://washdata.org/

WHO (2018). Guidelines on sanitation and health. https://apps.who.int/iris/bitstream/handle/10665/274939/9789241514705-eng.pdf

Solomon Water
Safe water for a healthy nation

Solomon Water Locations and Contacts

Honiara Office
Solomon Water
P.O. Box 1407
Honaira
Solomon Islands
Phone: +677 23985
Fax: +677 27023

Malaita Province Office
Auki Town
Malaita Province
Solomon Islands
Phone: +677 40324 or +677 23985

Western Province Office
Noro Town
Western Province
Solomon Islands
Phone: +677 61044 or +677 23985

Central Province Office
Tulagi Town
Central Province
Solomon Islands
Phone: +677 27023 or +677 23985